IoT Based Audit Meter Reading and Theft Detection

Khan Sameer[1] Khan Saalem[2] Mirza Safwan[3] Keyur Kalwar[4] Anil Ahir[5]
[5]Assistant Professor
[1,2,3,4,5]Department of Computer Technology
[1,2,3,4,5]Babasaheb Gawde Institute of Technology, India

Abstract— The Existing domestic Energy meter reading systems universally exist many problems, such as difficulty in construction, too narrow bandwidth, poor real time, not two-way communications quickly etc. To solve above problems, this paper uses the wireless technology for Automatic Meter Reading system. A proposed method provides the communication between the Electricity Board section and the consumer section using Internet of things (IOT) for transmitting the customer's electricity consumption and bill information that is calculated using PIC microcontroller. The power fluctuations are monitored using the voltage sensor and current sensor is fed to the microcontroller which indicates it to the Electricity Board. Depending on the power generation, the house hold devices are controlled automatically. From Electricity Board section the information regarding the bill amount and payment are communicated to the consumer via Global System for Mobile communication. The power and billing information is continuously transmitted by the use of Internet of Things and monitored by the Electricity Board section. Whenever there is power theft identified can be sent from the Electricity Board section to cut the supply to the customer.

Key words: IoT, Power Theft, Energy Meter, GSM, Leakage Current

I. INTRODUCTION

Electricity is one of the vital requirements for sustainment of comforts of life. IT should be used very judiciously for its proper utilization. But in our country, we have lot of localities where we have surplus supply for the electricity while many areas do not even have access to it. Our policies of its distribution are also partially responsible for this because we are still not able to correctly estimate our exact requirements and still power theft is prevailing. On the other hand, consumers are also not satisfied with the services of power companies. Most of the time they have complaints regarding statistical errors in their monthly bills. Thus, we are trying to present an idea towards the minimization of technical errors and to reduce human dependency at the same time. With the help of this project we are aiming to receive the monthly energy consumption from a remote location directly to a centralized office. In this way we can reduce human efforts needed to record the meter readings which are till now recorded by visiting every home individually. The purpose of this project is to remote monitoring and control of the Domestic Energy meter. This system enables the Electricity Department to read the meter readings regularly without the person visiting each house

II. RELATED WORK

From thorough review of related work and published literature, we have observed that many researchers have done rigorous work on Power Line Communication (PLC) and IoT. It is observed from the careful study of reported work that in the real world, PLC and IoT based meter can improve the efficiency of power system and can help to analyze the unnecessary loss of power in different areas.

A. Existing Method

The method used to carry out this project is the principle of serial communication in collaboration with embedded system. The project has a electric meter which will work and a GSM modem which is the latest technology used for communication between MODEM and embedded systems. The modem will send a message as and when desired to the electricity officials through Subscriber Identity Module inserted inside the MODEM.

B. GSM Modem

A GSM modem is a specialized type of modem which accepts a SIM card, and operates over a subscription to a mobile operator, just like a mobile phone. From the mobile operator perspective, a GSM modem looks just like a mobile phone A GSM modem exposes an interface that allows applications such as Now SMS to send and receive messages over the modem interface. The mobile operator charges for this message sending and receiving as if it was performed directly on a mobile phone. To perform these tasks, a GSM modem must support an "extended AT command set" for sending/receiving SMS messages, as defined in the ETSI GSM 07.05 and 3GPP TS 27.005 specifications. GSM modems can be a quick and efficient way to get started with SMS, because a special subscription to an SMS service provider is not required. In most parts of the world, GSM modems are a cost-effective solution for receiving SMS messages, because the sender is paying for the message delivery. A GSM modem can be a dedicated modem device with a serial, USB or Bluetooth connection, such as the Falcom Samba 75 used in this document. (Other manufacturers of dedicated GSM modem devices include Wavecom, Multitech and iTegno.) SIM 300 is a Tri band GSM/GPRS engine that works on frequencies 900MHz, DCS 1800 and 1900MHz. With tiny configuration of 40mmx33mmx2.9mm, SIM 300 can meet almost all the space requirements in your applications, such as smart phone, PDA phone and other mobile devices. The physical interface to the mobile application is a 60 pin board t board connector, which provides all hardware interfaces between the module and customers' boards except the RF antenna interfaces. You can turn on the module by driving the PWRKEY to a low level voltage for period time.

The automatic power on circuit illustrate as following figure. The PWRKEY pin is the NO.34 pin of the module interface.

All rights reserved by www.ijsrd.com

Fig. 3: Gsm Module

III. WORKING PROTOTYPE DETAILS

The idea behind this project is to use the existing GSM infrastructure. So, all the operations involve the GSM system also. As we send any SMS, it goes through the GSM system. Any sent SMS can be received if we use a SIM card and GSM module. To operate any GSM modem, we have to use the AT commands to operate them. For example, if any GSM arrives the GSM modem sends the serial data in ASCII format. We can read these data if we connect the modem with the serial port of the microcontroller at the baud rate of 9600. As the microcontroller comes to know that a SMS has been arrived, it can send a proper AT command to read the SMS. The reading of SMS returns the mobile no of sender, the time and much more information. We have to select the SMS part of the message. The starting string of the SMS is used as the password. As the password is matched, then the SMS arrival is assumed to be valid by the microcontroller otherwise, it ignores the SMS. Working of "SMS based device control system using GSM MODEM" is very simple.

It can be simply understood by its block diagram &circuit diagram. The energy meter records the amount of power consumption. It does so by an electromechanical system. The system is provided with such a mechanism that an increment in amount of current flow through circuit causes the disc to rotate faster, means that the rotational speed of disc is directly proportional to the amount of current flowing through circuit. This rotation effect of disc causes the gear mechanism to work accordingly and in similar fashion rate of power consumption increases the blinking rate of LED integrated within the meter. The pulses from this LED are fed to microcontroller for count operation i.e. these pulses are counted by microcontroller and readings are stored into external memory. External memory used here, is EEPROM. This memory is able to store previous database as well in case one needs to check past consumption status. LCD is connected with microcontroller so as to show the current status of GSM Modem. GSM modem is the means to communicate over wireless systems. GSM modem is connected with microcontroller via MAX 232 IC.GSM modem communicates at RS232 standard voltage levels while uC understands TTL logic levels so MAX 232 serves as voltage level converter. It converts Rs232 levels into TTL and vice- versa.

Whenever a command is sent to the GSM modem, it decodes the commands and works accordingly.

e.g. if Meter Read command is sent to modem then it captures the status of memory and picks only integral value and sends the same information via wireless network to another modem whose address has been cited in the program written inside the ROM.

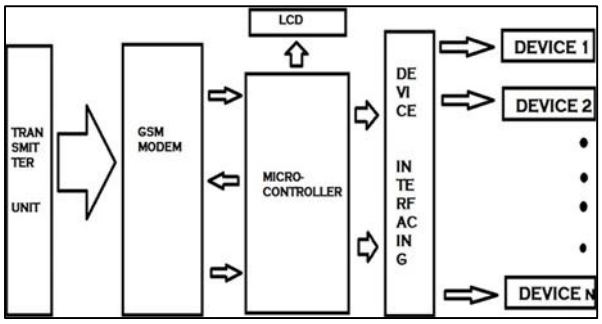

Outputs

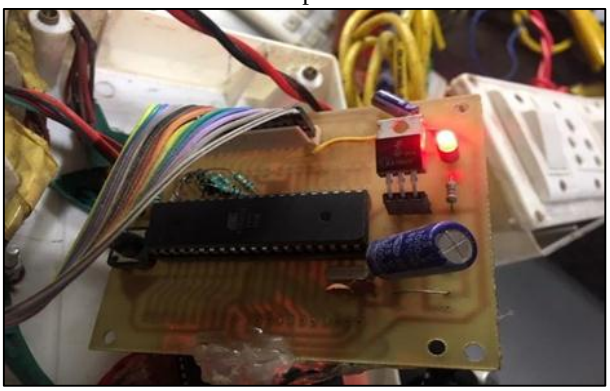

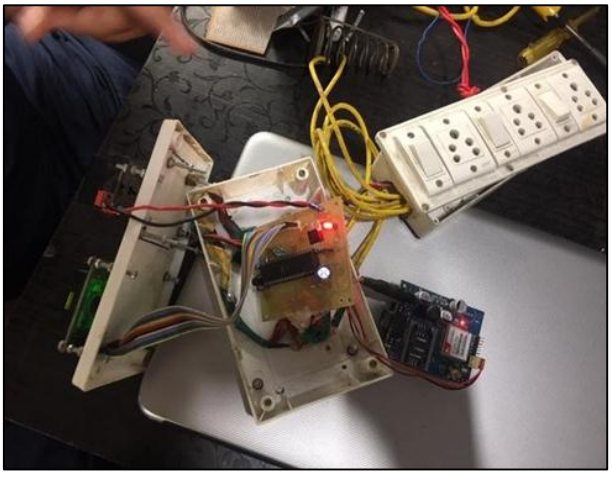

All rights reserved by *www.ijsrd.com*

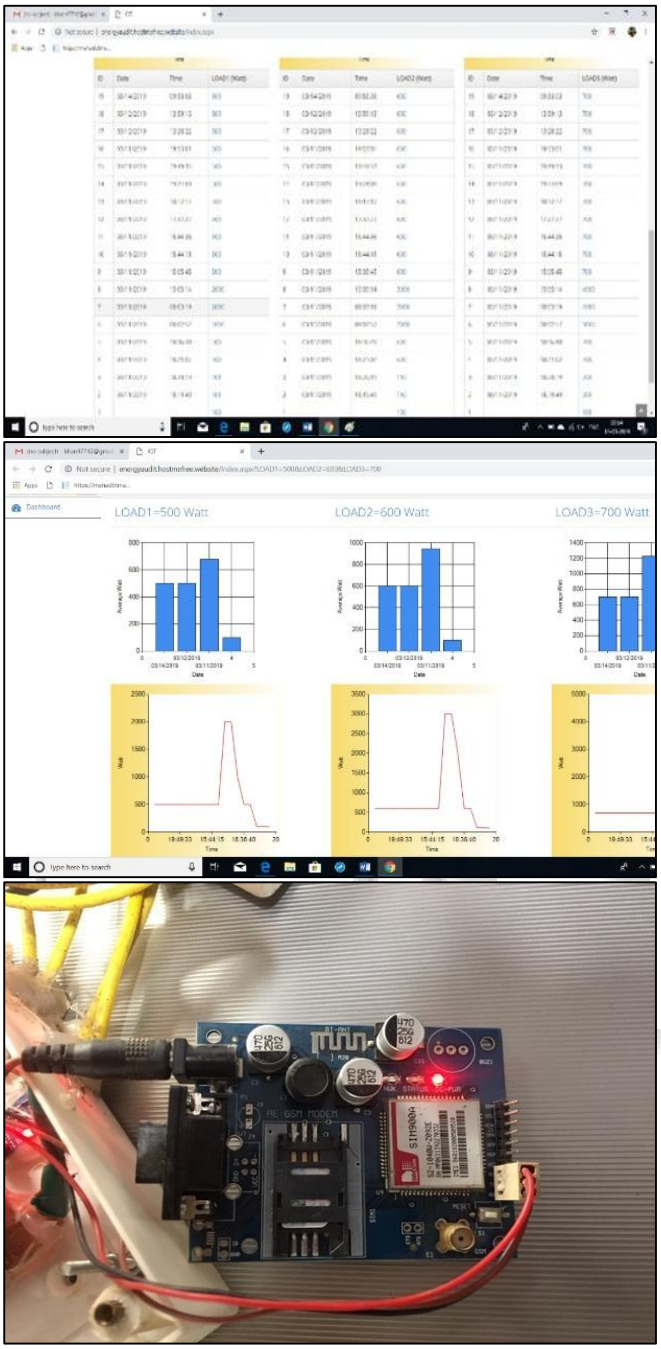

Feedback

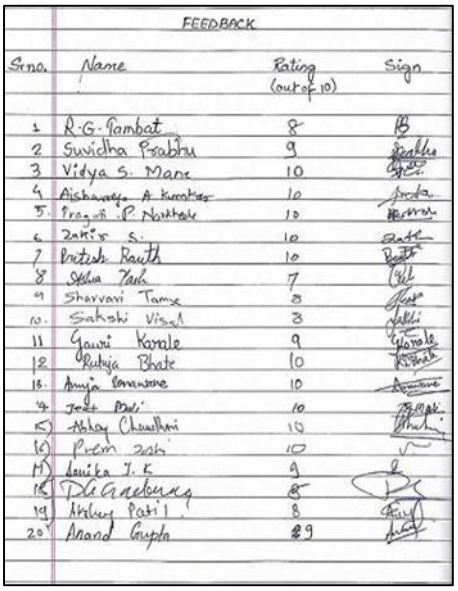

FEEDBACK

Sno.	Name	Rating (out of 10)	Sign
1	R.G. Tambat	8	
2	Suvidha Prabhu	9	
3	Vidya S. Mane	10	
4	Aishwarya A. Kumbhar	10	
5	Pragati P. Narkhede	10	
6	Zakir S.	10	
7	Pritesh Rauth	10	
8	Sthiva Yash	7	
9	Sharvari Tamse	8	
10	Sakshi Visal	8	
11	Gauri Karale	9	
12	Rutuja Bhate	10	
13	Anuja Ponawane	10	
14	Jeet Bali	10	
15	Abhay Chaudhari	10	
16	Prem Joshi	10	
17	Janika J. K	9	
18	D.G. Gaekwad	8	
19	Akshay Patil	8	
20	Anand Gupta	9	

IV. CONCLUSION

This project of 'IOT BASED AUDIT METER AND THEFT' has been implemented with the main aim of reducing human intervention and implementing technology at Industry levels. Conclusion In the era of smart city advancement, this project is concentrated on the connectivity & networking factor of the IoT. In this project, an energy consumption calculation based on the counting of calibration pulses is designed and implemented using PIC16F*&A MCU in embedded system domain. In the proposed work, IoT and PLC based meter reading system is designed to continuously monitor the meter reading and service provider can disconnect the power source whenever the customer does not pay the monthly bill and also it eliminates the human involvement, delivers effective meter reading, prevent the billing mistake. The Project has achieved following objectives: -

1) Ease of accessing information for consumer from energy meter through IoT.
2) Theft detection at consumer end in real time.
3) LCD displays energy consumption units and temperature.

V. FUTURE SCOPE

Future enhancement in the present system, IoT energy meter consumption is accessed using Wi-Fi and it will help consumers to avoid unwanted use of electricity. The performance of the system can be enhanced by connecting all household electrical appliances to IoT. So, in future following objectives can be achieved to save power and avoid thefts: -

1) We can make an IoT system where a user can monitor energy consumption and pay the bill Online.
2) We can make a system where a user can receive SMS, when he/she crosses threshold of electricity usage slab. We can make a system which can send SMS to the concerned meter reading man of that area when theft detected at consumer end.
3) We can find leakage current int the meters of a specific building through this project and avoid accident.

All rights reserved by *www.ijsrd.com*

REFERENCES

[1] Paper of M.J Wanderer on "activation of home automation system via mobile technology"
[2] Wikipedia-GSM technology
[3] Data sheet of ATMEGA 168
[4] www.motorola.com-interfacing device information
[5] Dr. Aditya Trivedi-Prof. IIIT Gwalior
[6] Labs guru workshop –programming details.

Websites

[1] www.atmel.com
[2] www.beyondlogic.org
[3] www.wikipedia.org
[4] www.howstuffworks.com
[5] www.alldatasheets.com
[6] www.efymag.com
[7] www.alldatasheets.com
[8] Electronics for You Magazine
[9] Prado, "Programming and Customizing the 8051 Microcontroller ", TMH Publications, 2008
[10] John cassoulets, "Designing Embedded Hardware", SHROFF PUB. & DISTR
[11] Mazizi,"8051 Microcontroller Programming"; Pearson Education, 2009

Textbook Referred

[1] The 8051 Microcontroller and Embedded systems" by Muhammad Ali Mazizi and Janice Gillespie Mazizi, Pearson Education.
[2] ATMEL 89S52 Data Shee

All rights reserved by *www.ijsrd.com*