Performance of Different Equalizers in MIMO – VLC

Pratik Panchal[1] Prof. Mihir V. Shah[2] Prof. Usha Neelkantan[3]
[1,2,3]Department of Electronics and Communication Engineering
[1,2,3]LDCE, Ahmedabad, Gujarat, India

Abstract— The growth of optical communication is tremendous due to the increased demand of bandwidth for different applications. Optical communication provides high speed data rate system and high security, and applying MIMO (Multiple Input Multiple Output) in optical communication fulfils the requirement of increased demand of channel capacity and accuracy. In this paper, we introduce MIMO VLC system, to improve the system performance from adjacent channel interference. MIMO VLC system performance improvement can be done by applying different equalizers such as Zero Forcing (ZF), Minimum Mean Square Error (MMSE), ZF – SIC (Successive interference cancellation) and MMSE – SIC.

Key words: Multiple Input Multiple Output (MIMO), Visible Light Communication (VLC), Bit Error Rate (BER), Signal to Noise Ratio (SNR), Zero Forcing (ZF), Minimum Mean Squared Error (MMSE), Zero Forcing Successive Interference Cancellation (ZF – SIC), Minimum Mean Squared Error Successive Interference Cancellation (MMSE – SIC), Field of View (FOV)

I. INTRODUCTION

Visible Light Communication system (VLC) is dual use of illumination and communication concept. A VLC concept is that, the data is propagated through visible light wave. Visible Light wave produced by LED or LASER. But LED has many advantages like energy savings and longer lifespans and also other benefits. Usage of LED is increased exponentially. LED has short range of illumination so that it can be used in indoor environments for both purpose illuminations as well as communication. The LEDs are capable of switching to different light intensity levels at a very fast rate. The switching rate is fast enough to be imperceptible by a human eye. This functionality can be used for communication where the data is encoded in the emitting light in various ways. A photo detector or an image sensor (matrix of photo diodes) can receive the modulated signals and decode the data. Visible Light Communication provides many benefits. First visible light spectrum in Figure 1 includes hundreds of terahertz of license free bandwidth which is completely untapped for communication. Second due to its high frequency, visible light cannot penetrate through most object and walls. It can also increase the capability of available wireless channel. Third, VLC facilitates the reuse of existing lighting infrastructure for purpose of communication.

In MIMO VLC system, as the number of transmitters and receivers increases, large adjacent channel interference is introduced. The adjacent channel interference is helpful to achieve higher strength of signal at receiver side due to use of MIMO diversity repetition coding technique. Repetition coding means simply transmit same data by multiple transmitters.

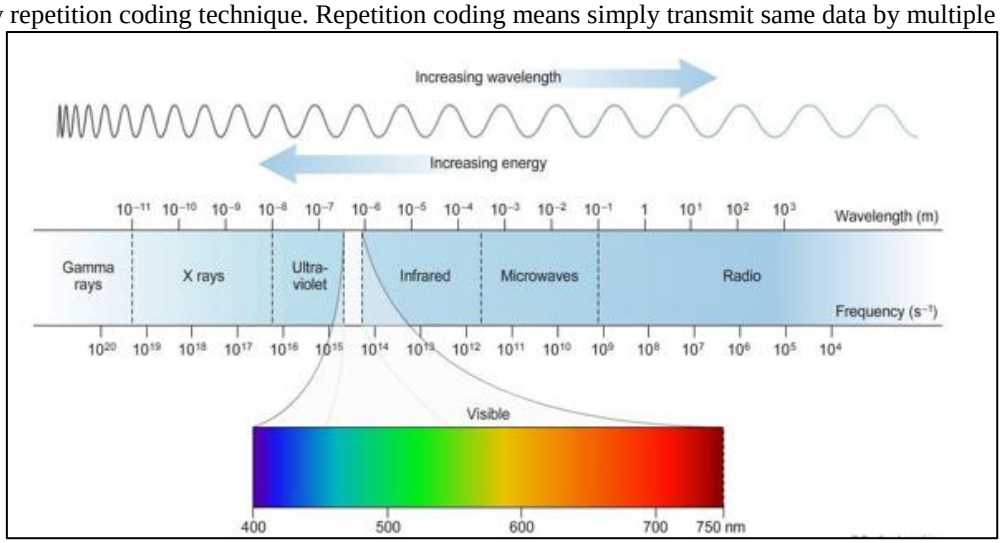

Fig. 1: Light Spectrum

In this paper we discuss about equalizer, which is used for removing Inter-Symbol Interference (ISI). Performance of MIMO VLC can also be increased by applying different equalizer. The type of simple equalizer is the Zero Forcing (ZF) and Minimum Mean Squared Error (MMSE). We can also improve the performance of the system by adding the Successive Interference Cancellation (SIC) approach into the equalizer. ZF – SIC and MMSE - SIC equalizers give better performance because SIC uses adjacent channel interference to improve the performance of MIMO VLC system. For remove perfect effect of Inter-Symbol Interference (ISI), we use optimal ordering in different equalizer. All different equalizers applied in MIMO VLC system, and the related simulations have been implementation in MATLAB.

II. VLC SYSTEM OVERVIEW

VLC system block diagram is shown in Figure 2.

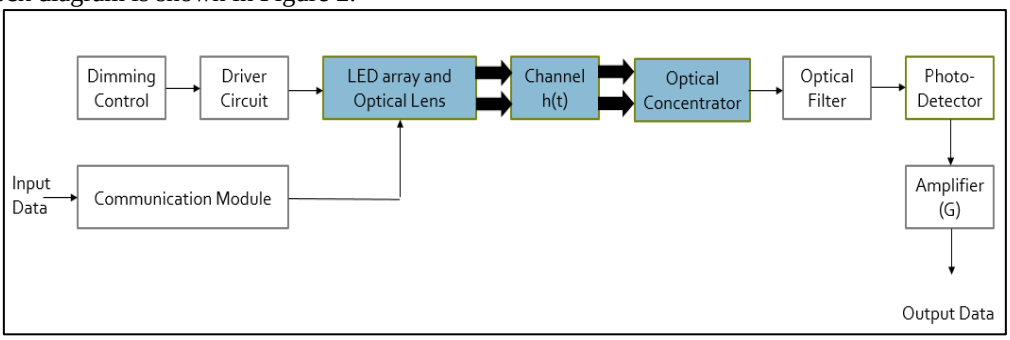

Fig. 2: Block Diagram of VLC

Each module of VLC is described below.

A. VLC Transmitter

Precise dimming control can be done by LED. Driving circuit combines the input data of communication module and they drive a dimming control of LED array. LED arrays are generating multiple light signals.

For transmitting Light signal, the LED luminaire can be used. LED luminaire unit which consist of an LED lamp, ballast housing and other components, and Driving circuit which controls the current flowing through LEDs to control its brightness.

White light is the most commonly used form of illumination in both indoor as well as outdoor applications. This is because colours of objects as seen under the white light closely resemble the colours of the same objects under the natural light.

White light is produced in two ways [5]. First one is blue LED with the yellow phosphor coating on the outside. When the blue light traverses through the yellow coating, the combination produces a white light. Different variations of the white light are produced by modifying the thickness of the phosphor layer. Second one is RGB combinations in which white light can be produced by proper mixing of red, green and blue lights. In this method, three separate LEDs are used which increase the cost of LED luminaire compared to using the blue LED with phosphor. RGB combination is more preferable for communication because we use color shift keying to modulate the data using three different wavelengths.

B. VLC Receiver

Optical concentrator is used in receiver, to set receiver at particular angle of light beam. Optical filter is also used to filter out data distorted by noise and multi path effect. Two types of receivers can be used to receive the signal transmitted by an LED [5]. First one is Photodetector, also referred as photodiode or non-imaging receiver which receives the précised light incident on it and then converts into current. Second one is Imaging Sensor which is also called as camera sensor. Camera sensor consists of many photodectors arranged in a matrix or array in an integrated circuit [5].

C. VLC Channel

In VLC channel, experimental arrangement or setup is made with LED as transmitter and photodectors as receiver in a Line of Sight (LOS) link. For calculating channel gain we have to analyze indoor link. For VLC, indoor link four types are possible [4]. First is Line of Sight (LOS) link, in which receiver and transmitter are in-line. Second is Non-directed LOS link where at receiver side there are LOS path and multipath due to physical obstacles and the wall of room. Third is diffuse link with no LOS path but having only multipath signals on the receiver side Fourth is Quasi diffuse link with multiple narrow beam transmitters and narrow Field of View (FOV) receiver, achieving lower multipath effects and lower path loss.

III. MIMO SYSTEM MODEL

In this section, we describe Multiple Input Multiple Output (MIMO) VLC system and also discuss parameters that affect the VLC link. First, we consider the MIMO link configuration as shown in Figure 3 [14].

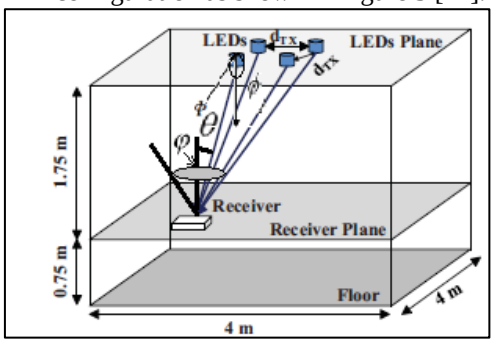

Fig. 3: MIMO Link Configuration

Ⓠ is receiver's FOV. At transmitter side viewing angle (Irradiance) with respect to transmitter surface is Ø and transmitter FOV is ϕ. θ is the angle of incidence with respect to the axis of the receiver surface Lambertion emission is defined as m [11]

$$m = -\frac{\ln 2}{\ln(\cos \phi_{\frac{1}{2}})} \tag{1}$$

The optical concentrator gain of receiver defined as.

$$g(\theta) = \begin{cases} \frac{n^2}{sin^2 Ⓠ}, & 0 \le \theta \le Ⓠ \\ 0, & 0 \ge Ⓠ \end{cases} \tag{2}$$

In MIMO we consider multiple LED as transmitters, assuming that number of LEDs as M. Consider that transmitting signal through LOS link and at j^{th} receiver channel gain is computed as,

$$h_{ij} = \begin{cases} \sum_{M=1}^{M} \frac{A_{pd-rj}}{d^2{}_{ij}} R_0(Ⓠ). \cos \beta_{ijM}, & 0 \le \beta_{ijM} \le \beta_c \\ 0, & \beta_c > \beta_{ijM} \end{cases} \tag{3}$$

Where Lambertian radiant intensity $R_0(Ⓠ)$ is,

$$R_0(Ⓠ) = \frac{(m+1)}{2*\pi} cos^2(\emptyset) \tag{4}$$

Where A_{pd-rj} the collection area of the receiver is, $d^2{}_{ij}$ is the distance from the transmitter to the receiver. θ is the angle of incidence on the receiver and Ⓠ is the receiver FOV.

All parameter as discussed as usual above $d^2{}_{ij}$ is distance between i^{th} transmitter to j^{th} receiver. Channel gain make matrix M x N matrix, which is denoted by H matrix

$$H = \begin{bmatrix} h_{11} & \cdots & h_{1N} \\ \vdots & \ddots & \vdots \\ h_{M1} & \cdots & h_{MN} \end{bmatrix} \tag{5}$$

Channel output vector y is defined as

$$Y = Hx + n \tag{6}$$

Where n is noise at the receiver. MIMO system performance is affected by H matrix. At receiver side, multiple signals are received through multiple transmitters. At j receiver received signal is

$$r_j = RP_t \sum_{i=1}^{i=M} h_{ij} t_i + \sqrt{\overline{\sigma_{nJ}^2}} \tag{7}$$

Transmitted power is defined as [11]

$$P_t = P_{LED} * R_0(Ⓠ) \tag{8}$$

Received power P_r depends upon the filter transmission $T_s(\theta)$ and concentrator gain. Ideally concentrator gain and transmission filter are considered as 1 [2].

$$P_r = P_t * HLOS * g(\theta) * T_s(\theta), \quad 0 \le \theta \le Ⓠ \tag{9}$$

Output vector Y is,

$$Y = [r_1 \quad \cdots \quad r_j] \tag{10}$$

Data is estimated by [2],

$$d_{est} = yH_T \tag{11}$$

BER for OOK scheme

$$BER = Q\sqrt{SNR} \tag{12}$$

Q is a function that depends upon the modulation scheme. SNR depends upon the responsivity of photodiode. SNR is calculated as

$$SNR = \frac{(RP_t)^2}{\sigma_{shot}^2 + \sigma_{thermal}^2} \tag{13}$$

IV. MATHEMATICAL ANALYSIS OF EQUALIZER

In MIMO VLC different equalizer are used for improving the performance of VLC system. In normal equalizer ZF and MMSE improves BER at low rate. One step ahead of equalizer, we are adding the Success Interference Cancellation (SIC) approach in-to normal equalizer to improve performance parameter of VLC system. Below the discussion about all different equalizer approach is given.

For all equalizer, we consider 2 X 2 MIMO VLC channel. In that we consider two transmit antennas and two receive antennas. In that configuration x_1 and x_2 are sent from the first and second antennas respectively. Two antenna configuration is used with data rate doubled. Output vector data y is

$$\begin{bmatrix} y1 \\ y2 \end{bmatrix} = \begin{bmatrix} h_{11} & h_{12} \\ h_{21} & h_{22} \end{bmatrix} \begin{bmatrix} x_1 \\ x_2 \end{bmatrix} + \begin{bmatrix} n_1 \\ n_2 \end{bmatrix} \tag{14}$$

y_1 and y_2 are the received symbols n_1 and n_2 are the random noises in the system.

A. Zero Forcing (ZF) equalizer

Apply zero forcing detector in the VLC MIMO channel. That zero forcing equalizer calculated by equation [15]

$$W = (H^T * H)^{-1} * H^T \tag{15}$$

For solving x, it is needed to find a matrix which satisfies WH = I, where I is the identity matrix. Hence the matrix W is known as zero forcing linear detector.

B. Minimum Mean Squared Error (MMSE) Equalizer

That MMSE approach finds a coefficient W which minimizes the criterion.

$$E = \{ [W_y - x][W_y - x]^H \} \tag{16}$$

Solving equation [16],

$$W = (H^H H + N_0 I)^{-1} H^H \tag{17}$$

Now comparing equation [17] with zero forcing equalizer equation [15]. Whenever $N_0 I$ term is equal to zero, that MMSE equalizer is similar to ZF equalizer.

C. ZF Successive Interference Cancellation (SIC)

Using zero forcing approach we obtain two estimated transmitted symbol.

$$\begin{bmatrix} \hat{x}_1 \\ \hat{x}_2 \end{bmatrix} = (H^T H)^{-1} H^T \begin{bmatrix} y_1 \\ y_2 \end{bmatrix} \tag{18}$$

Take estimated symbol and subtract its effect from the received vector. Here we consider the $\hat{x}_1$ and subtract from y_1 *and* y_2.

$$\begin{bmatrix} r1 \\ r2 \end{bmatrix} = \begin{bmatrix} y_1 - h_{12}\widehat{x2} \\ y_2 - h_{22}\widehat{x2} \end{bmatrix} = \begin{bmatrix} h_{11} & x_1 + n_1 \\ h_{21} & x_2 + n_2 \end{bmatrix} \tag{19}$$

$$\begin{bmatrix} r1 \\ r2 \end{bmatrix} = \begin{bmatrix} h_{11} \\ h_{21} \end{bmatrix} x_1 + \begin{bmatrix} n_1 \\ n_2 \end{bmatrix} \tag{20}$$

This concept is same as receive diversity concept of Maximum Ratio Combining (MRC) which combines the multiple copies of received signals. The equalized symbol is

$$\hat{x}_1 = \frac{h^H r}{h^H h} \tag{21}$$

This form represents the ZF- SIC approach. In that we assume that x_2 is decoded correctly.

D. MMSE Successive Interference Cancellation (SIC)

Using MMSE equalization, the receiver can obtain estimate of two transmitted symbol x_1 *and* x_2.

$$\begin{bmatrix} \hat{x}_1 \\ \hat{x}_2 \end{bmatrix} = (H^H H + N_0 I)^{-1} H^H \begin{bmatrix} y_1 \\ y_2 \end{bmatrix} \tag{22}$$

In this case, one estimated symbol is subtracted from the effect of the received symbol. In equalizer, we would know that which will be first subtracted $\hat{x}_1$ or $\hat{x}_2$. To make that decision find received power of each antennas.
Received power at transmitted symbol x_1 is,

$$P_{x_1} = |h_{11}|^2 + |h_{21}|^2 \tag{23}$$

Received power at transmitted symbol x_1 is,

$$P_{x_2} = |h_{21}|^2 + |h_{22}|^2 \tag{24}$$

If $P_{x_1} > P_{x_2}$ then receiver defines to remove the effect of $\hat{x}_1$ from received vector, else subtract effect of $\hat{x}_2$from the received vector.

V. SIMULATION RESULT

Different equalizer configurations are applied in MATLAB for 2 X 2 MIMO VLC. In Figure 4, it has been observed that normal equalizer gives minimum BER for 2 X 2 MIMO VLC channel. Between ZF and MMSE equalizers 1 dB improvement is noted. ZF SIC and MMSE SIC gives 3 dB improvement as compared to normal ZF and MMSE equalizers.

In optimal ordering, we decide which estimated symbol effect will be first subtracted improving the result. In simulation result Figure 4 shows MMSE – sort curve that represents optimal ordering of MMSE equalizer.

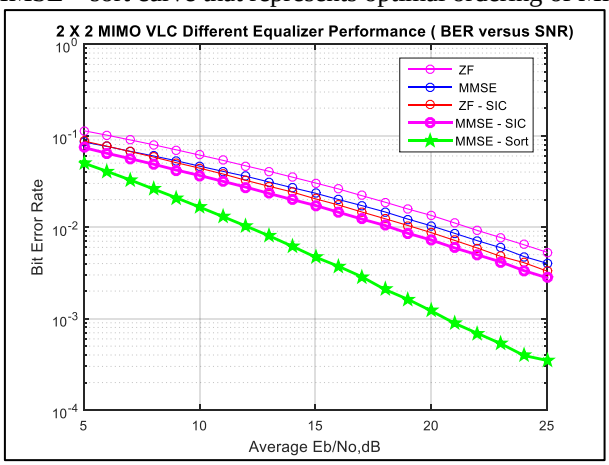

Fig. 4: Performances of 2 X 2 MIMO VLC for different

VI. CONCLUSION

In MIMO VLC system, low BER is achieved using various equalizers. MMSE equalizer with optimal ordering gives the best performance result. Normal equalizer MMSE gives 1 dB improvement compared to the ZF. ZF – SIC and MMSE – SIC give 3 dB improvement compared to the normal equalizer.

REFERENCES

[1] P Fahamuel , J Thompson , H Haas , "Study, analysis and application of optical OFDM, single carrier (SC) and MIMO in intensity modulation direct detection (IM/DD)" The Edinburgh University, Edinburgh EH9 3JL, UK, IEEE 2013
[2] Z. Ghassemlooy, W. Popoola, S. Rajbhandari, Optical Wireless Communications System and Channel Modelling with MATLAB®, CRC Press, © 2013 by Taylor & Francis Group, LLC
[3] Anil Yesilkaya, Farshad Miramirkhani, Ertugrul Basar, Erdal Panayirci and Murat Uysal, "Performance of MIMO Enhanced Unipolar OFDM with Realistic Indoor Visible Light Channel Models" , Workshop on Optical Wireless Communications (OWC 2016),978-1-4673-8666-1/16/$31.00 ©2016 IEEE.
[4] Hany Elgala, Raed Mesleh, Harald Haas," Indoor Optical Wireless Communication: Potential and State-of-the-Art", IEEE Communications Magazine • September 2011.
[5] Parth H. Pathak, Xiaotao Feng,y, Pengfei Hu, Prasant Mohapatra," Visible Light Communication, Networking and Sensing: A Survey, Potential and Challenges " , IEEE Communications Surveys and Tutorials, IEEE Communications Surveys & Tutorials 2015.
[6] Liang Wu, Zaichen Zhang, Jian Dang, and Huaping Liu, " Adaptive Modulation Schemes for Visible Light Communications" ,JOURNAL OF LIGHTWAVE TECHNOLOGY, VOL. 33, NO. 1, JANUARY 1, 2015.
[7] Jian Chen, Yang Hong, Xiaodi You, Huanhuan Zheng, and Changyuan Yu, Conceptual Design of Multi-user Visible Light Communication Systems Over Indoor Lighting Infrastructure, 2014 9th International Symposium on Communication Systems, Networks and Digital Sign (CSNDSP)
[8] Zi Feng, George Papageorgiou, Qian Gaoy, Ahmed F. Atya, Srikanth V. Krishnamurthy, Gang Cheny, " Performance of Visible Light Communications with Dimming Controls"
[9] Sarangi Devasmitha Dissanayake, and Jean Armstrong, " Comparison of ACO-OFDM, DCO-OFDM and ADO-OFDM in IM/DD Systems" , JOURNAL OF LIGHTWAVE TECHNOLOGY, VOL. 31, NO. 7, APRIL 1, 2013
[10] Cuiwei He, Thomas Q. Wang and Jean Armstrong, " Performance of Optical Receiver Using Photodetectors with Different Fields of View in a MIMO ACO-OFDM System" ,Journal of Lightwave Technology 2015, not published
[11] Visible Light Communication Edited by Shlomi Arnon Ben-Gurion University of the Negev, Israel, CAMBRIDGE UNIVERSITY
[12] Zhen Zhan1,3, Min Zhang*1, Dahai Han1, Pengfei Luo2, Xiongyan Tang, Zabih Ghassemlooy, Lei Lang3 1.2 Gbps Non-Imaging MIMO-OFDM Scheme based VLC over Indoor Lighting LED Arrangements, Optical Communications Research Group, NCRLab, Northumbria University
[13] Qi Wang, Zhaocheng Wang, LinglonDai, Multiuser MIMO-OFDM for Visible Light Communications, IEEE Photonics Journal
[14] Ruowen Bai, Rui Jang, Jiandong Tan, and Jinguo Quan, " Performance Comparison of VLC MIMO Techniques Considering Indoor Illuminance with Inclined LEDs" , Wireless for Space and Extreme Environments (WiSEE), 2016 IEEE International Conference
[15] Thilo Fath and Harald Haas, " Performance Comparison of MIMO Techniques for Optical Wireless Communications in Indoor Environments" , IEEE TRANSACTIONS ON COMMUNICATIONS, VOL. 61, NO. 2, FEBRUARY 2013.