Analysis over the Effect of Various Factors Responsible for Drilling Process

Er. Jitendra Kumar
Department of Mechanical Engineering
AMIE, India

Abstract— Drilling is an important machining operation and mostly used to assemble the various parts to each other. But sometimes the drilling operation becomes very critical due to hardness of metal or alloy, due to difficult design of product, due to brittleness of material, due to more ductility and due to change in physical conditions as change in temperature etc. Some problems may be solved till a limit but some problems are uncontrollable. But it is also critical to maintain the machining conditions in opposite situations. To solve such type critical situations we have to think separately and have to search the solution practically sometimes. By providing some changes as technique of operation, workpiece material structure, drill geometry and machining parameters etc. the drilling operation may be obtained easily with good surface finish.

Keywords: Drilling Process

I. INTRODUCTION

Mostly the workpiece metal or alloy should not be very hard and very soft because the extreme hard metal may increase the tool breakage problem and more soft metal may increase the chip overlapping problems on the tool cutting edge. Besides it the other many problems may be created due to these type metals and alloys like roughness, burrs, waviness, dents etc.

II. METHODOLOGY/LITERATURE SURVEY

A. Methodology Related to Material to Be Drilled –

Conditions of drilling, various machining parameters and tool geometry etc depend on the type metals and its alloys to be drilled. Generally for metals and alloys the internal structure of particles should be homogenous so that the material particles are removed smoothly with the surface finish. For this first of all the metal or alloy should be inspected previously by using destructive and non-destructive tastings and find out the behavior with the various type mechanical properties and then improve it sufficiently. Besides it to improve the internal structure of the workpiece metal or alloy the casting process should be improved by providing some important chemical reactions at molten stage. The heat treatment processes also help to improve the internal structure of metal or alloy.

B. Methodology Related to Drill Geometry –

If some required changes are provided in drill geometry like fig.(A) where the point thickness is finished and the sharp point is provided and the cutting edge is provided till the top cutting point.

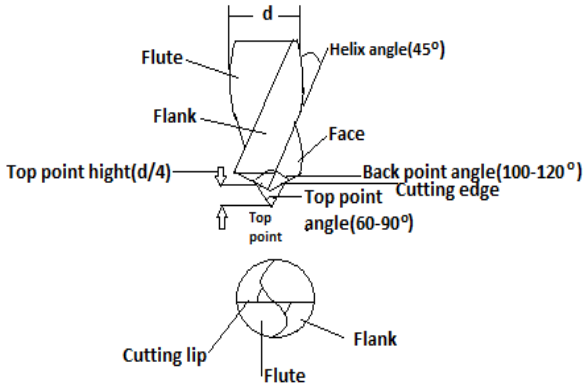

Fig. (A)

Besides it here the bottom portion of drill is made nose type. Here there are two type angles provided first is back point angle (100-120°) and second is top point angle (60-90°). By this the chisel angle is finished and the material directly starts to cut in minor chips by cutting edges. By this change provided to the drill geometry the number of revolutions required (N) and the the vertical force required (F) both are reduced till a limit.

C. Methodology Related to Machining Parameters –

By providing the top cutting point at the end of drill the material is removed rapidly with surface finish by using less effort and sufficient number of revolutions. Means we can say that the machining parameters are improved by providing this change in drill geometry. Like the feed is increased sufficiently. Besides it the power required is reduced sufficiently.

D. Methodology Related to Cutting Fluid or Coolant –

The cutting fluid or coolant used should be non-viscous sufficiently. Besides it the nozzle crossection should be elliptical so that cutting fluid or coolant may spread sufficiently. Besides it minimum three numbers of the nozzles should be fitted around the drill at 30° to the axis of drill. Both the major and minor chips should be extracted from the hole and flown fastely. It depends on the type of coolant or cutting fluid used and its purification arrangements. Means it should be cleaned and strained every time before applying on the workpiece. By this the viscosity of the fluid remains stable and low which assists to flow the cutting fluid effectively.

III. ANALYSIS

A. Analysis over the Cutting Edge of the Drill –

Due to providing the sharp top cutting point till the end, the length of cutting edge is increased. By this the metal removal rate is increased fastly and the hole is obtained immediately. Now let the metal removal rate (M) in m^3/min. depends on the length of cutting edge (l) in cm, r.p.m of the drill (N) ,

vertical feed in (f) in cm/min, and shear strength of workpiece (F_S) in N/cm^2.

Then by Buckingham's π theorem →

$$f(l, v, F_S, f, M) = 0 \rightarrow \quad \text{Equ.(A)}$$

So the number of variables

(n) = 5

Now on putting the dimensions of all variables →

$L = (L)$, $N = (T^{-1})$, $F_S = (MLT^{-2})$, $f = (LT^{-1})$, $M = (L^3T^{-1})$

So it is clear that the number of dimensions (m) = 3

So the number of π terms = 5-3 = 2

So we can write as $f_1(\pi_1, \pi_2) = 0 \rightarrow$ Equ.(B), where

$$\pi_1 = (l^{a1}.N^{b1}.F_S^{c1} . M) \rightarrow \quad \text{Equ.(C)}$$

$$\pi_2 = (l^{a2}. N^{b2}. F_S^{c2}. f) \rightarrow \quad \text{Equ.(D)}$$

Now on putting the all dimensions at both sides of the of equation (C) →

$$(M^0L^0T^0) = \{(L)^{a1}. (T^{-1}).^{b1} (MLT^{-2})^{c1}. (L^3T^{-1})\}$$

On comparison of dimensions at both sides →

$$a_1 + c_1 + 3 = 0 \quad \text{Equ.(E),}$$

$c_1 = 0$, - $b_1 - 2c_1 - 1 = 0$ or $b_1 = -1$

Then from equation(E)→$a_1 = -3$

Then again from equation(C) –

$\pi_1 = (l^{-3}.N^{-1}.F_S^0 . M)$

$$\pi_1 = \{ M / Nl^3 \} \rightarrow \quad \text{Equ.(F)}$$

Now on putting the all dimensions at both sides of the equation (D) →

$$(M^0L^0T^0) = \{(L)^{a2}. (T^{-1}).^{b2} (MLT^{-2})^{c2}. (LT^{-1})\}$$

On comparison of dimensions at both sides →

$a_1 + c_1 + 1 = 0$ Equ.(E), $c_2 = 0$, - $b_2 - 2c_2 - 1 = 0$ or $b_2 = -1$

Then from equation(E)→$a_1 = -1$

Then again from equation(D) –

$$\pi_2 = (l^{-1}.N^{-1}.F_S^0 . M)$$

$$\pi_2 = \{ f / Nl \} \rightarrow \quad \text{Equ.(H)}$$

Then from equation (B) →

$f_1 (M / Nl^3, f / Nl)$

or $M / Nl^3 = \phi (f / Nl)$

$M = l^2 \phi (f)$

Now if ϕ (f) is constant then →

$$M \alpha l^2 \quad \text{Equ. (I)}$$

According equation (I) it is clear that if the length of cutting edge is increased some the metal removal rate is improved sufficiently.

Here it is also clear that the metal removal rate does not depend on the shear strength of the workpiece material.

B. Analysis over the Top Cutting Point Provided on the Drill –

Due to providing the top cutting point at the end of drill the length of cutting edge is increased. By this the surface of material directly comes in contact with the cutting edges and the material starts to cut immediately as the drill touches the material surface. By this the negligible friction is provided at starting time of drilling process and the cutting edges works effectively without any blunt problem. Due to low angle (60-90^0) provided at the top point the metal is removed fastely in microchips initially and provides the clear way to remove the workpiece material. Besides it due to 30 to 40 % face removed by top cutting point the other percentage of face is removed easily and fastly by the drill major cutting edges. If the top point cutting edges and major cutting edges are hardened and tempered sufficiently the cutting edges will work effectively without blunt problem creating. Besides it the production capacity will improve sufficiently.

IV. FINAL RESULT

Hence if such type improvement is provided in the drill geometry the machining parameters are improved sufficiently and the power consumption is provided till a limit. Besides it tool breakage and failure conditions are also minimized sufficiently.

V. CONCLUSION

It is clear that the geometrical condition of the drill also may provide effective results which may increase the metal removal rate, productivity, working efficiency and decrease the wastage etc.

REFERENCES OF THE BOOKS

[1] Buckingham, s π theorem, Fluid Mechanics, Author R.K Bansal.
[2] Production technology, Author R.K Jain.
[3] Material science, Author K.M Gupta.

