Test Event Generation for an Automated Orthosis and Fall Detection System Using IoT

P. Jeyaprakash[1] M. Dhivya[2] V. Jamuna[3] G. Parkavi[4] R. Preethi[5]
[1]Assistant Professor [2,3,4,5]BE Student
[1,2,3,4,5]Department of EEE
[1,2,3,4,5]Vivekanandha college of technology for women, Tamilnadu, India

Abstract— Recovery robots have gotten one of the common techniques for right hand treatment of engine issue patients in the field of clinical restoration. Conventional restoration robots are generally made of inflexible a material, which fundamentally constrains their application for clinical recovery. Delicate robots show extraordinary potential in the field of recovery robots in view of their innate consistence and wellbeing when they interface with people. Ligament driven hand orthosis have focal points over exoskeletons regarding wear capacity and wellbeing due to their position of safety structure and capacity to fit a scope of patients without requiring custom joint arrangement. In this paper, Soft restoration robots dependent on ligament driven activation are normally determined by links, for example, Bowden link. Links in mechanical structures are utilized to reproduce ligaments of human, guide's patients to perform restoration practices by recreating the biomechanical properties of tendons and ligaments. Texture tapes, Teflon tubes and adaptable links were utilized in the Soft recovery robots rather than mechanical pulley utilized in the customary ligament steering framework to control fingers. With this test occasions are created to screen the time length of recovery process started by patients and furthermore alarms if there should be an occurrence of any inadvertent falls utilizing IoT (Internet of Things). Framework likewise gives power over electrical gadgets, for example, light and fan.

Keywords: FES, Orthosis, Fall Detection, IoT

I. INTRODUCTION

One of the most widely recognized hindrance designs in stroke patients is loss of fine engine control together with spasticity that limits useful utilization of the hand [1]. As of late, numerous wearable robots have been created for patients with inadequate engine recuperation, a condition which influences the greater part of stroke patients following traditional recovery [2]. In structuring these wearable robots [9], the spotlight has regularly been on wearability perspectives as intends to give the patients increasingly redundant activities. So as to convey significant help where patients can broaden their hand against the power of spasticity, the incitation likewise must be sufficient while keeping the gadget smaller [10].

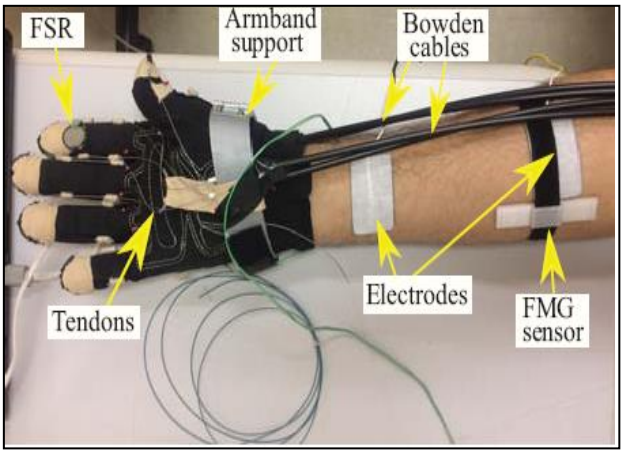

Fig. 1: Sample Picture of FMS and electrodes

Close by the utilization of exoskeletons, is useful electrical incitement (FES). Profited by electronic designing progressions, FES is other driving help applied to restoration.

Linkage-based exoskeletons for the most part give proficient power transmission; be that as it may, arrangement of a pivot of turn with each finger and its particular automated joint stays testing [8]. The misalignment can make hazardous contact between the gadget and client, bringing about distress and injury [7]. Moreover, since we will utilize a wearable automated glove/exoskeleton and FES to give powers, our gadgets can possibly function as a help as-need apparatus [4]. Different focal points of the proposed hydrid control system, will be the decreasing of extent of the torment at the terminal locales and deferring muscle weakness, since that the utilization of FES don't should be as exceptional to cause a similar development when utilizing just FES, because of the supporting power originating from the exoskeleton [2].

II. BACKGROUND STUDY

Park, S., et al. [1] proposed distal structures of a ligament driven hand assistive orthosis for productive power transmission. So as to assess the plans, we ran reproductions with scientific models and led tests utilizing a 3D-printed counterfeit finger.

Neto, A. et al. [2] proposed a fundamental report identified with the improvement of a half and half control methodology utilizing an exoskeleton and a FES framework, fit for improving joint scope of wrist movement and with the possibility to diminish muscle weariness. Right then and there, the half breed exoskeleton model utilizing FES can possibly be utilized as a help as-need gadget. So as to bear the cost of successful homebased restoration and help individuals with handicap play out their ADLs, we have to concentrate on programming and equipment advancement to outfit an improved implanted arrangement. A thought about

the gadget is that it can't take care of the issue of muscle hand particularity, for example it can't control the 5 fingers independently. To do that, a trigger with more channels are vital just as guide each finger isolated by reproducing the ligament driven instrument for each finger.

H. Zhao, et al. [3] planned both the equipment and a control technique for a closedloop delicate orthosis. We played out the underlying evaluation of its power enlarging abilities and the input control by means of optical-fiber sensors inserted into every actuator. We likewise demonstrated that the orthotic can be utilized to follow orders from an EMG signal. Our improved direct mechanical investigation shows the key job of an outspread, that is, circumferential, imperative for the working of the swelled elastomeric fingers. It additionally shows that more grounded fingers are conceivable utilizing circumferential unidirectional strands around round-area polymeric fingers with the hub limitation at the finger base, which confirms earlier trial results

B. B. Kang, et al. [5] A polymer-based ligament driven delicate wearable automated hand, Exo-Glove Poly, was proposed and itemized configuration highlights of the parts were depicted. Exo-Glove Poly utilizes silicone as its base material to satisfy the sanitation prerequisites of clinics and other different clients. Since Exo-Glove Poly doesn't utilize any texture, it tends to be handily cleaned by cleaning with a liquor swab. Not at all like the texture based ligament were driven wearable mechanical hand, Exo-Glove, flexibility to various hand sizes and incitation practiced through point by point configuration highlights and creation forms, not with material consistence.

III. OUR SYSTEM MODEL

In this work, we propose a cross breed control methodology utilizing an exoskeleton (a ligament driven glove created as introduced in [2]), and a FES framework to arrive at the favorable circumstances of the two strategies. To actualize the cross breed control methodology, we utilize an Arduino Uno with a shield utilized for electrical incitement, both open programming/equipment.

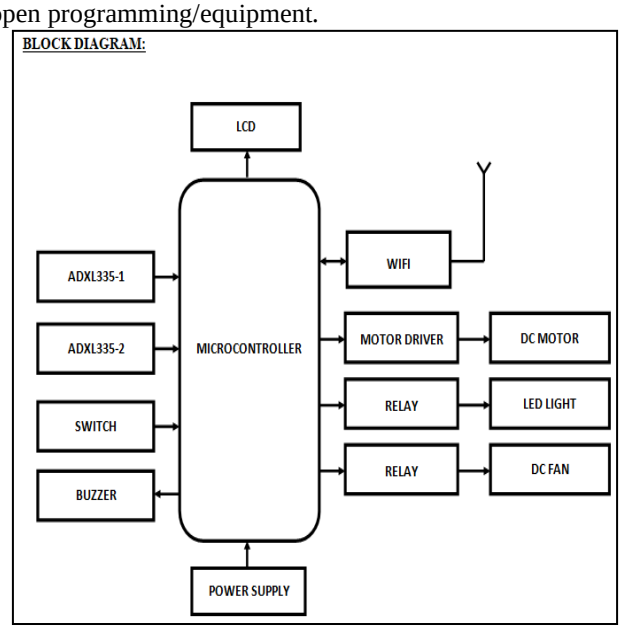

Fig. 2: Block Diagram

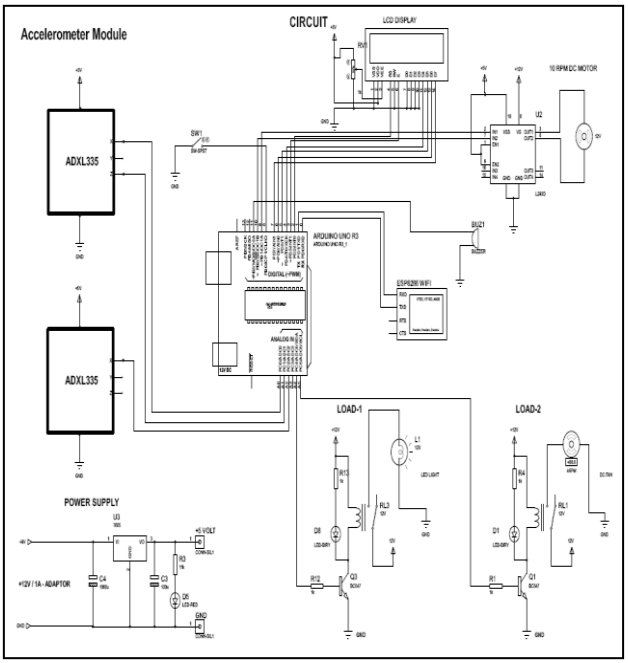

Fig. 3: Accelerometer module

A. *DC MOTOR DRIVER CIRCUIT*

Motor driver circuit using the l293d motor driver:
Motor Driver:

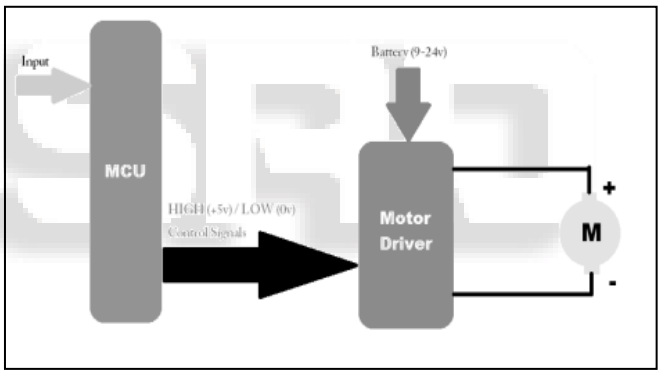

Fig. 4: Block Diagram – Motor Control

In the above square graph, we can see that there is a microcontroller (MCU). Presently, this MCU may/may not take in inputs (contributions as in from sensors, other computerized inputs, and so on). Next, according to our programming, the MCU will create control signals. If it's not too much trouble note that the MCU will create flags in type of HIGH (Vcc = 5v) or LOW (zero). However, this voltage is inadequate to drive an engine. That is the reason we have to utilize a Motor Driver.

An engine driver consistently has a battery input Vs (which relies on the rating of the engine). In straightforward terms, what an engine driver does is that it guides the Vs voltage to the engines associated (or truth be told, the yield pins) to it. Consequently, the engines carry on according to the control signals produced utilizing the MCU with the excitation from the outer battery voltage.

B. *L293D Connections*

L293D is a 16 pin IC which comes in a DIP Package. Its pin configuration is shown below.

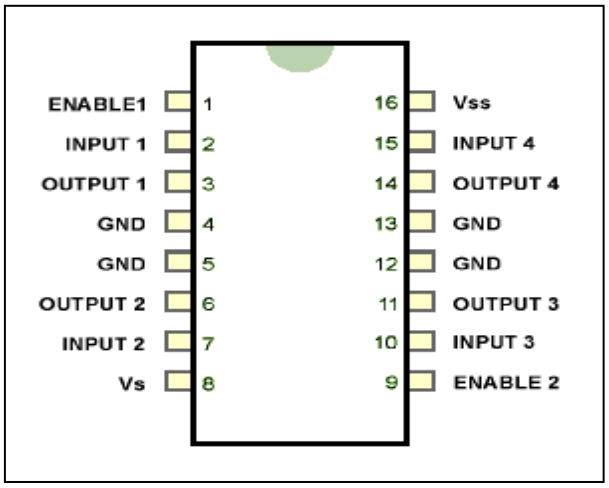

Fig. 5: L293D Pin Configuration

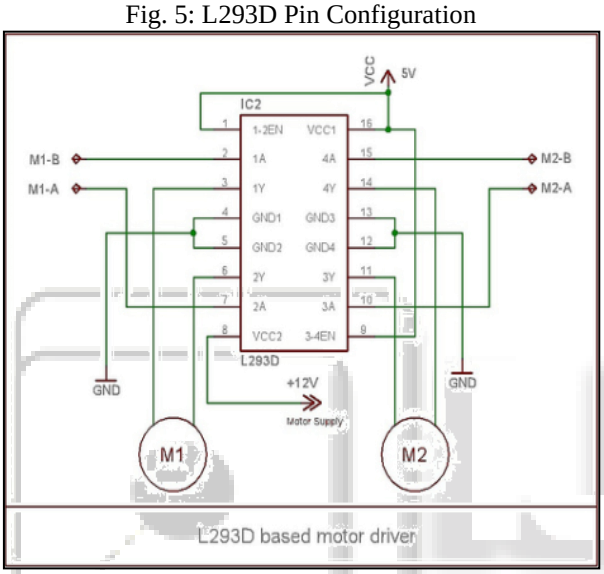

Fig. 6: Motor Driver

1) Connection Description:

- There are two enable (EN) pins, pin 1 and pin 9. Pin 1 EN enables the motor M1 whereas pin 9 EN enables motor M2.
- Connect motor M1 across OUTPUT1 and OUTPUT2 i.e. across pins 3 and 6.
- Connect motor M2 across OUTPUT3 and OUTPUT4 i.e. across pins 11 and 14.
- The inputs for motor M1 is given across INPUT1 and INPUT2 i.e. across pins 2 and 7.
- The inputs for motor M2 is given across INPUT3 and INPUT4 i.e. across pins 10 and 15.
- Connect GROUND pins 4, 5, 12 and 13 to ground.
- Connect pin 16 to Vcc (=5V) and pin 8 to Vs (battery, 4.5V~36V).

As per the diagram, the inputs of motor M1 are M1-A and M1-B, whereas inputs of motor M2 are M2-A and M2-B.
Now consider the following cases for motor M1:

- M1-A = 1 and M1-B = 0 → M1 moves clockwise (say). Then
- M1-A = 0 and M1-B = 1 → M1 moves counter-clockwise.
- M1-A = 0 and M1-B = 0 → M1 stops.
- M1-A = 1 and M1-B = 1 → M1 stops.

Similar cases can arise for motor M2:

- M2-A = 1 and M2-B = 0 → M2 moves clockwise (say). Then
- M2-A = 0 and M2-B = 1 → M2 moves counter-clockwise.
- M2-A = 0 and M2-B = 0 → M2 stops.
- M2-A = 1 and M2-B = 1 → M2 stops.

From these two motor connections we can control the robots:

- FORWARD
- REVERSE
- LEFT &
- RIGHT MOVEMENTS

IV. DISCUSSION

Each testing meeting was performed throughout one visit. Spasticity scores at the elbow, wrist, and digits were surveyed utilizing the MAS when testing. Subjects were then fitted with the exotendon orthotic gadget and guided through the accompanying method with every rendition of the gadget.

The person opens the hand utilizing the orthosis. Expansion of the PIP and MCP joints of the forefinger are estimated utilizing a goniometer. The forefinger was chosen for estimation as it was generally available with the gadget set up; it was additionally subjectively seen to be illustrative of the four fingers.

The person endeavors to handle and discharge multiple times to instigate exhaustion. The gadget is activated to help hand opening utilizing a catch at the purpose of maximal exertion. On the fifteenth reiteration, the joint points of the forefinger are estimated once more. By and large, exhaustion builds tone close by development, and this estimation is taken to check whether one can in any case accomplish practical hand augmentation in this condition.

The person takes a rest for five minutes to diminish the effect of exhaustion. At that point, the last estimations of the joint edges of the forefinger are recorded while the gadget is helping.

V. CONCLUSION

In this proposed system, we have proposed distal structures of a ligament driven hand assistive orthosis for productive power transmission. So as to assess the plans, we ran recreations with numerical models and led tests utilizing a 3D-printed fake finger. We additionally performed clinical tests with stroke patients to concentrate genuine relevance. In the geometric model examination, the two structures we propose empowered torque ages with huge second arms around joints of a finger, contrasted with customary gadgets. The upsides of the huge second arm were exhibited by the analyses with a counterfeit finger. A thought about the gadget is that it can't take care of the issue of muscle hand particularity, for example it can't control the 5 fingers independently. To do that, a trigger with more channels is vital just as guide each finger isolated by recreating the ligament driven component for each finger. As in regards to the utilization of the FMG sensor, contingent upon the

measure of leftover muscle action, it might be not appropriate for all individuals with extreme hand inability. For this situation, other methodology increasingly delicate to the lacking of muscle movement should be applied related to a method for smothering the antiquities containing boost electrically evoked by FES [6].

Another two significant future works are change the uninvolved incitation to a functioning activation, and actualize a mutual control system to portion the commitment of the glove and FES available's power, and make a convention to assess muscle exhaustion utilizing the exoskeleton and FES.

REFERENCES

[1] Park, S., Weber, L., Bishop, L., Stein, J., & Ciocarlie, M. (2018). Design and Development of Effective Transmission Mechanisms on a Tendon Driven Hand Orthosis for Stroke Patients. 2018 IEEE International Conference on Robotics and Automation (ICRA).
[2] Neto, A. R., Fajardo, J., Ferman, V., Fujiwara, E., & Rohmer, E. (2019). A Hybrid Control Strategy for Tendon-actuated Robotic Glove and Functional Electrical Stimulation – A Preliminary Study. 2019 IEEE 4th International Conference on Advanced Robotics and Mechatronics (ICARM).
[3] H. Zhao, J. Jalving, R. Huang, R. Knepper, A. Ruina, and R. Shepherd, "A helping hand: Soft orthosis with integrated optical strain sensors and emg control," IEEE Robotics & Automation Magazine, vol. 23, no. 3, pp. 55–64, 2016.
[4] S. Biggar and W. Yao, "Design and evaluation of a soft and wearable robotic glove for hand rehabilitation," IEEE Transactions on Neural Systems and Rehabilitation Engineering, vol. 24, no. 10, pp. 1071–1080, 2016
[5] B. B. Kang, H. Lee, H. In, U. Jeong, J. Chung, and K.-J. Cho, "Development of a polymer-based tendon-driven wearable robotic hand," in Robotics and Automation (ICRA), 2016 IEEE International Conference on. IEEE, 2016, pp. 3750–3755
[6] J. D. Schaechter, "Motor rehabilitation and brain plasticity after hemiparetic stroke," Progress in neurobiology, vol. 73, no. 1, pp. 61–72, 2004.
[7] A. H. Stienen, E. E. Hekman, F. C. Van Der Helm, and H. Van Der Kooij, "Self-aligning exoskeleton axes through decoupling of joint rotations and translations," IEEE Transactions on Robotics, vol. 25, no. 3, pp. 628–633, 2009.
[8] A. Schiele and F. C. van der Helm, "Kinematic design to improve ergonomics in human machine interaction," IEEE Transactions on Neural Systems and Rehabilitation Engineering, vol. 14, no. 4, pp. 456–469, 2006.
[9] D. G. Kamper, H. C. Fischer, E. G. Cruz, and W. Z. Rymer, "Weakness is the primary contributor to finger impairment in chronic stroke," Archives of physical medicine and rehabilitation, vol. 87, no. 9, pp. 1262–1269, 2006.
[10] R. A. Stuck, L. M. Marshall, and R. Sivakumar, "Feasibility of saeboflex upper-limb training in acute stroke rehabilitation: A clinical case series," Occupational therapy international, vol. 21, no. 3, pp. 108–114, 2014.

