IoT Based Smart Energy Meter Design and Implementation

Koustav Kumar Mondal
Department of Electronics and Communication Engineering
Saroj Mohan Institute of Technology, Hoogly (W.B), India

Abstract— With the advent of the Internet and computational era, not only is there an opportunity to send and receive data between people, but also between devices without human control over it. This is known as the notion of Internet of Things (IoTs) that can be used to solve the increasing problem of power/energy management. To overcome human errors, manual labor and cost reduction in energy consumption with more effectiveness for the power management scheme, we concentrate in this article on the energy surveillance of IoT in particular. The suggested design is to introduce a very low price wireless sensor network and protocol for intelligent energy and web applications capable of reading the device automatically and sending the information to power users to view their present energy meter reading. Using this scheme will make consumers conscious of the use of electricity in their home to decrease energy wastage and consumption costs. The ESP8266 WiFi module will be integrated with the 16-bit ADC, AC current sensor and the TCP / IP protocol will be implemented for communication between the meter and the web application. The experimental findings indicate that the implemented scheme performs very well with accuracy and for very inexpensive-building automatic energy meter reading it is possible to integrate in practical applications.

Keywords: Smart Meter; Power Monitoring; Internet of things; WIFI ESP8266; Arduino; Smart Home; Wireless Sensor Network; Non-Invasive AC Current Sensor; Thingspeak

I. INTRODUCTION

In terms of intelligence and automation, the new era of the Internet of Things (IoT), which referred to unique recognizable objects and represented in an "internetlike" framework, has played a significant part in our daily lives as comfort methods. By generating connectivity, IoT, as an smart scheme, connects stuff like universal worldwide neutral network, resulting in a enormous amount of information being produced that needs to be managed and controlled as a consequence of this process. As technology progresses, the automation management system of IoT is used in many fundamental infrastructures such as electricity, gas and water management systems to make it more convenient for individuals and organisations. Therefore, in terms of control and leadership, the system can solve the problems of human error and energy loss. Moreover, manual control and unit recording operation can also be solved without human error. Communication and networking are the main role in tracking all kinds of connectivity between the individual devices to accomplish this advanced scheme. The task is to construct a solid, low-power usage and low-cost network system. Our suggested system's primary goal is to introduce and create very low-cost single phase WiFi digital energy meters with IoT ideas.

The system can provide data communication between digital energy meters and web server gateway by using low-cost ESP8266 Wi-Fi module in order to monitor the energy management system. By using this scheme, energy users ' billing can be based on real consumption instead of estimating based on prior consumption. The following is the organization of this document. Section 2 will describe the literature survey and related works. The explanation of the entire system architecture will be displayed in section 3. The system application of the suggested scheme was examined in chapter 4. The last two sections are the outcomes and the conclusion of the experiment.

II. LITERATURE SURVEY AND RELATED WORKS

The design and execution of the IoT gateway for smart home with wire, wireless and embedded both wire and wireless had been suggested by a big number of articles in latest years. With wired home automation scheme, some scientists suggested a remote water temperature control system via transmission control protocol and Internet protocol (TCP / IP) with a reduced hardware cost protocol. In order to use this scheme, however, the user requires to install unique inconvenient software and at the same moment the system contains various sensors. Apparently, there are some problems facing the wired base system, such as deploying communication lines between appliances and installing back-end systems. It can boost the cost of building and maintenance to decrease users ' interest in providing a home automation system. Some scientists intended a home gateway for ZigBee and Ethernet networks for environmentally friendly green scheme for air pollutant surveillance and home care apps to decrease construction costs with wireless system. The built ZigBee / Ethernet gateway, however, did not support traditional access point functionality. Only through the Internet or Intranet can the gateway exchange sensing information and orders between two machines. In relation to integrating private wireless local area network and web home automation system, a research is being conducted with multiple communication technologies including internet, GSM, wireless radio frequency, but the current system architecture needed very high equipment costs and very low user interest. Compared to the current scheme, our proposed scheme is not only capable of decreasing implementation and maintenance costs, but also promotes hardware expenses and the Internet of Things (IoTs) idea by using low-cost energy meters with ESP8266 WiFi module integrated to interact with the established server with the web-based gateway scheme and is capable of reading the information from the energy meter automatic.

III. SYSTEM ARCHITECTURE

Most power utilities are implementing many levels of automation power management scheme across the network with the development of telecommunications and computer technology. As we mentioned above, it is anticipated that the IoT will drive so many attempts to standardize the internet and generate the future with true world Internet

communication. From the company view, the combination of technology will lead to the innovation and market efficiency solution for the creation of fresh approaches for IoT applications such as structural surveillance, health tracking, home, office automation, etc. The concept behind our suggested scheme is to create IoT based digital energy meter at a very low price. Our suggested scheme will use the web based Iot Platform for reading meter parameters like present, voltage, true power, Power factor in W, V, and A for the en ergy management system.

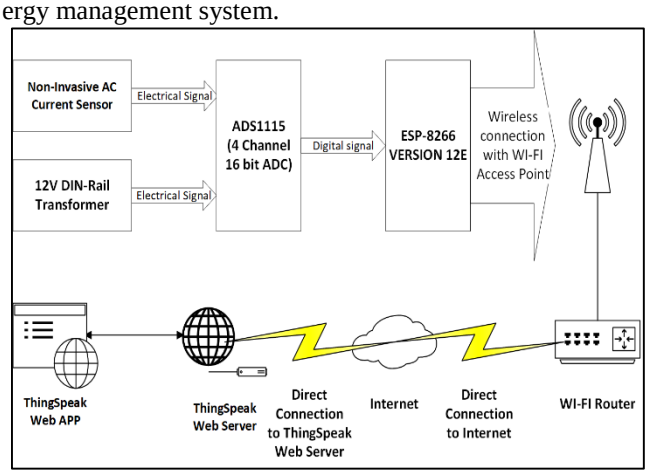

Fig. 1: System architecture of the proposed IoT-based Smart Energy Meter

Fig. 1 displays the system design of the IoT energy meter based on WiFi. The system comprises of a single phase meter based on ESP6288 WiFi with a TCP / IP communication protocol. In order to achieve efficient energy management, the suggested scheme integrates the integrated digital energy meter, IoT gateway, and web-based system.

IV. SYSTEM IMPLEMENTATION

The ESP8266 module is the system's center processing unit in our proposed IoTs system and is responsible for communication between the digital energy meter and the gateway web server to read the meter parameters and display the power Management system on the web app. Our system application design has two primary components, the first is the digital energy meter with integrated ESP8266 Wi-Fi Module and the second is the power management system gateway internet server. The circuit of our planned digital meter with WiFi module is shown in Fig. 2.

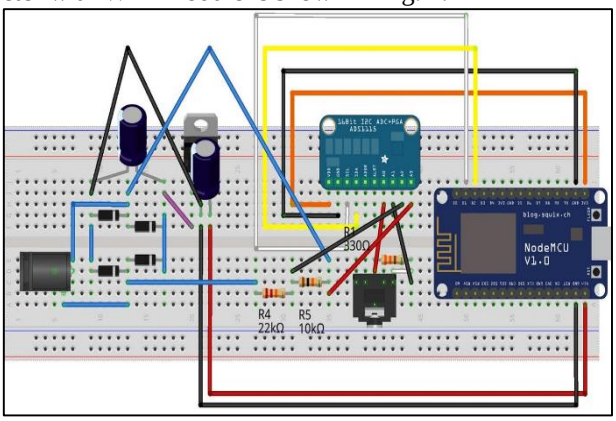

Fig. 2: Circuit of digital energy meter with Wi-Fi module ESP8266

The electronic energy meter in our suggested scheme comprises of ESP8266(Version 12E)-3.3V/80MHz with ADS1115(4-Channel 16-bit ADC) which is the primary feature for calculating meter parameters such as present, voltage, power, power factor in W, V, A and information transmission to ThingSpeak Server. The meter's current sensor can function up to 100 Ampere and is intended to be readily used with micro controllers, such as the esp8266. This present SCT-013-000 sensor device can provide low-cost alternatives for communication devices with AC current sensing.This device package enables simple application, including load detection and management, switching mode power supplies, and present defect security in particular Applications. The single phase voltage and current sensor unit is the ultra-micro current transformer SCT-013-000, analog and tiny size signal output with high precision, excellent voltage and energy measurement consistency. The voltage of the sensor module is up to 250VAC AC. It can be linked to ADS1115's ADC pin. Only for apparent power is this fundamental version. The ADS1115 is used in differential mode to keep the component count low and the circuit as simple as possible, eliminating the need for bias resistors. The difficult part is getting an electrician authorized to wire the clamp to the primary wire coming into the premises on the current sensor. Since we only have 1 channel, we will monitor the general power instead of the power per circuit. To wire the prototype on a breadboard, follow the Fritzing diagram below (Fig. 3). Powering the ESP8266 close the switchboard could also be a problem, so I installed a DIN rail power socket, which will later be useful for actual energy measurement.

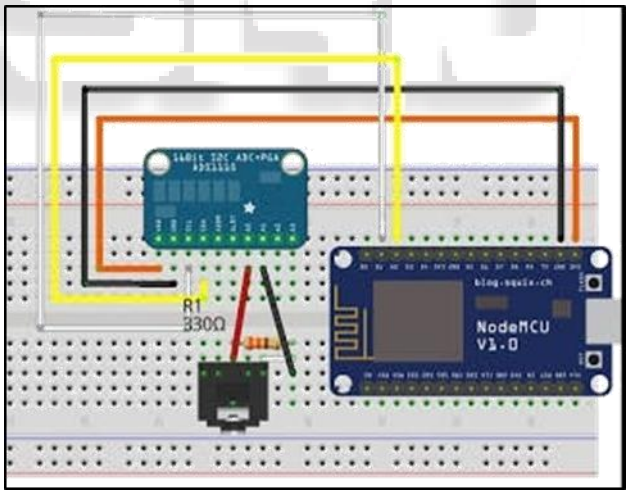

Fig. 3: Basic version of our digital energy meter

Real power can be measured using a 12V DIN-Rail transformer as long as problems with the charging power factor are calibrated. How this can be done is shown in the Fritzing diagram on Fig.2. Using a bridge rectifier, the ESP8266 can be operated in this configuration as shown. Care must be taken to prevent overloading the ADC when sampling AC voltage. The ADC can manage the highest peak-to-peak voltage with scale factor 1 is about 8V, the RMS AC voltage is about 2.8V. Different other factors are also evaluated when wired up in this mode, including power factor, real and apparent power and line voltage.

V. EXPERIMENTAL RESULT

In this chapter, we will demonstrate and show from the webs ite the experimental loadprofile outcomes of reading meterp arameters.

Fig. 4: The final system assembled

Fig. 5: Graph of Power factor, Real Power, Voltage and Current

VI. CONCLUSION

In this document, we suggested the low-cost application of the WiFi-based power meter for Internet of Things (IoT). The suggested scheme can overcome the energy efficiency and manageability difficulties and enhance them. Energy meter parameters such as load profile, demand value, and complete energy consumption can be read properly and reliably. For the application aspect of IoT, the ESP 8266 WiFi module operates reliably so that throughout the current server it can send the data to be displayed on the website. In summary, with very low cost, we can achieve the very high reliability digital energy meter and monitor it as well as the standard energy meter. With the ESP8266 WiFi module integrated in the meter with the TCP / IP protocol to enable communication between the meter and the web application, our suggested scheme can also be accomplished with fewer complications steps. Future works will include improving efficiency in terms of detection of manipulations and notifications of failure.

REFERENCES

[1] Somchai Thepphaeng; Chaiyod Pirak. Design and Implementation of Wireless Sensor Network and Protocol for Smart Energy Meter. 2011 International Conference on Circuits, System and Simulation IPCSIT vol.7 (2011) © (2011) IACSIT Press, Singapore.
[2] Chih-Yung Chang,Chin-Hwa Kuo,Jian-Cheng Chen and Tzu-Chia Wang Design and Implementation of an IoT Access Point for Smart Home. Applied Science; ISSN 2076-3417. www.mdpi.com/journal/applsci
[3] Su, J.H.; Lee, C.S.; Wu, W.C. The Design and Implementation of a Low-Cost and Programmable Home Automation Module. IEEE Trans. Consum. Electron. 2006, 52, 1239–1244.
[4] Lucia, L.B.; Toscano, E. Coexistence Issues of Multiple Co-Located IEEE 802.15.4/ZigBee Networks Running on Adjacent Radio Channels in Industrial Environments. IEEE Trans. Ind. Inform. 2009, 5, 157–167.
[5] Shuaib, K.; Boulmalf, M.; Sallai, F.; Lakas, A. Co-Existence of ZigBee and WLAN, a Performance Study. In Proceedings of the 2006 IFIP International Conference on Wireless and Optical Communications Networks, Bangalore, CA, USA, 11–13 April 2006; pp. 1–6.
[6] Yuksekkaya, B.; Kayalar, A.A.; Tosun, M.B.; Ozcan, M.K.; Alkar, A.Z.A GSM, Internet and Speech Controlled Wireless Interactive Home Automation System. IEEE Trans. Consum. Electron. 2006, 52, 837–843.

