# A Survey Paper on Design and Simulation of Hybrid Wind Diesel Energy System using PMSG in MATLAB

**Uliya mitra[1] Ms.Pallavi Singh Bondriya[2]**
[1]M.Tech Scholar [2]Associate Professor
[1,2]Department of Electrical & Electronics Engineering
[1,2]Technocrat Institute of Technology Bhopal, M.P., India

*Abstract*— A Hybrid system is one in which a renewable source of energy is incorporated with other energy source. This thesis deals with wind-diesel engine system. The total output of this system is mainly due to wind and the remaining is by diesel generators. Remote and rural areas can be benefitted by this system. The thesis deals with a strategy of developing active power such that when the wind single-handedly can't satisfy the energy demand, keeping the frequency constant a transition takes place from wind only mode to wind diesel mode so that the energy required is fulfilled. Here a permanent magnet synchronous generator is used for electricity generation. The model uses a PI controller for controlling the error. The design and performance analysis is done in MATLAB/Simulink environment.

***Key words:*** Wind Turbine, Diesel Generator

## I. INTRODUCTION

With new inventions and modernization in the field of technology the global environment scenario is becoming worse day by day. The consumption of energy is increasing, limited resources of fossil fuel and their cost is increasing the requirement of renewable energy sources. This resources are basically a part of Earth's natural environment .This are obtained from natural resources such as wind, biomass, sunlight, green energy, tides, and geothermal energy. Electricity generation is one of their important application. Renewable energy such as solar energy is obtained from sunlight and has various applications such as heating, cooking etc. This renewable energies has minimum effect on environment as they produce less pollutants that is waste product obtained from them in the form of chemicals such as carbon-di-oxide etc. is less.

The solar and wind energy acquires an important position also they have great potential in terms of generation of electricity. This are used basically due to their various advantages such as low cost, low or null emission of pollutants and gases and the ease of obtaining them i.e. their availability. But with this advantage their exist some disadvantages also. The major disadvantage with this type of energy is that the amount of energy obtained from them depends on the climatic conditions. As a result they are unable to produce the required amount of energy which is produced by the conventional sources. Thus to use this energies either we have to reduce the demand or consumption or else we have to go for a hybrid system which uses both type of energies. One more disadvantage with renewable energies are that they depend on their sources. For example the blades of wind turbine will rotate only when there is wind flowing in sufficient amount. Same is the case with solar cells and panels the energy generated by them depends on the position of sun for collecting heat and generation of electricity after it. As a result its generated output cannot be predicted. But the use of this type of energies can reduce the excessive capital cost required for generation. In this paper we are using a conventional system with renewable energy source that is wind to increase the production so as to meet the demands. Here we are using a hybrid system comprising of Diesel generator set and wind turbine by simulation in MATLAB and will analyse the performance of this system at various wind speed. The installation of wind energy is both consumer and eco-friendly and also requires a very petite time span for setting up of the plant compared to other conventional generative sources.

The effective and crossbreed utilization of these type of sources are necessary for the constant power generation. These types of hybrid system are planned for increasing generation potential and reduction in cost of power production. The subsistence of the Wind – Diesel Hybrid system taken place in the latter division of 20th century. The combination of two generating system depends on the control action for proper sharing of fluctuating wind energy and usable diesel generation to fulfil the demand which is very uneven in nature. It is also a major concern to reduce the ecological effect of diesel generation which is beneficial in this Hybrid system power generation case. In remote locations various cost such as fuel's transportation cost could be limited if this hybrid system is used in best possible way for generation. One of the major concern is the power quality in renewable energy which is connected to micro grid.

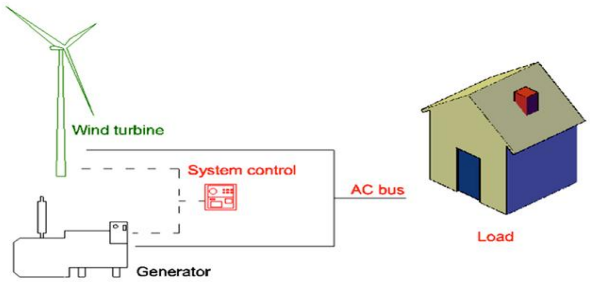


Fig. 1: Basic Wind Diesel Hybrid System

## II. BACKGROUND WORK

### A. Wind Power

The power obtained from a wind turbine is a utility of wind speed. The power obtained from wind turbines is generally at a wind speed of 4m/s(9mph), rated power is achieved at near about 13m/s(29 mph), and it stop its function of producing power at 25 m/s(56 mph).The power level of the turbine changes continually due to variable wind resource . At places where good wind is available, there its average capacity of a year is approximately, this variability results in the turbine operating at approximately 35% of its total capacity when averaged over a year.

 

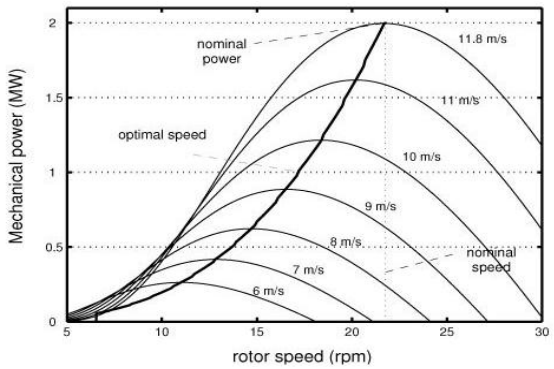


Fig. 2: Output power for different values of wind speed

### B. *Wind Turbines*

Wind is uneven from site to site as it depends generally on the climate and the geography of the region. Usually, the surface situation at the ground, such as trees, buildings and areas of water affect the behavior of the wind for a short time behaviour due to which fluctuations are introduced in the flow, also termed as turbulence. The effect of the ground roughness will then decrease as a function of height over the ground.

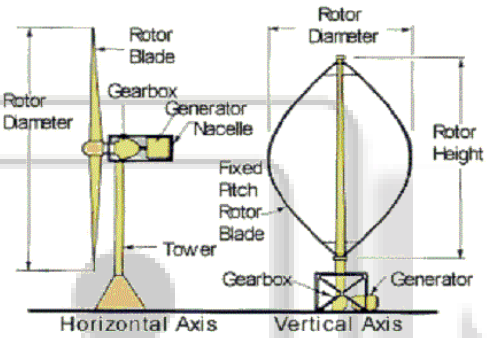


Fig. 3: Wind turbine configuration

### C. *Model of Wind Speed*

Wind power is usually in the form of kinetic energy moving above the earth's surface. The blades of wind turbine collect the kinetic energy of air which is transformed into mechanical or electrical forms. The efficiency with which the rotor come across the wind flow shows the effectiveness with which the wind is converted to other useful forms of energy. Kinetic energy present in the wind is given by:-

$$E = \frac{1}{2} m v_0^2 \qquad (1)$$

Where $m$ represents the air flow rate and $v_o^2$ denotes the wind speed.

Consider a wind rotor having cross sectional area A bare to the wind flow, then equation (1) is given by:-

$$E = \frac{1}{2} A V_0 \rho v_0^2 \qquad (2)$$

where $AV_0$ represents the volume flow and $AV_0\rho$ denotes the mass flow. $V_0$ is the volume of air received to the rotor. Hence power, can be expressed as

$$P_0 = \frac{1}{2} \rho A V_0^3 \qquad (3)$$

From equation (3), we came to know about the various factors which affect the power obtainable in the wind stream such as area of the rotor of wind turbine, wind velocity and density. Though the effect of wind velocity is more because of its cubic relationship with power.

### D. *Diesel Engines*

Diesel generators are used for off-grid generation. This are preferred for certain advantages such as installed capacity, shaft efficiency, start-stop operation. The shaft is coupled to the generator through which electricity is produced. Their speed is determined by the frequency of grid. They run at a speed defined by the frequency of supply grid. Here in addition with wind turbine and diesel generators, a converter, inverter and a load is used in the modelling of this Wind Diesel hybrid system.

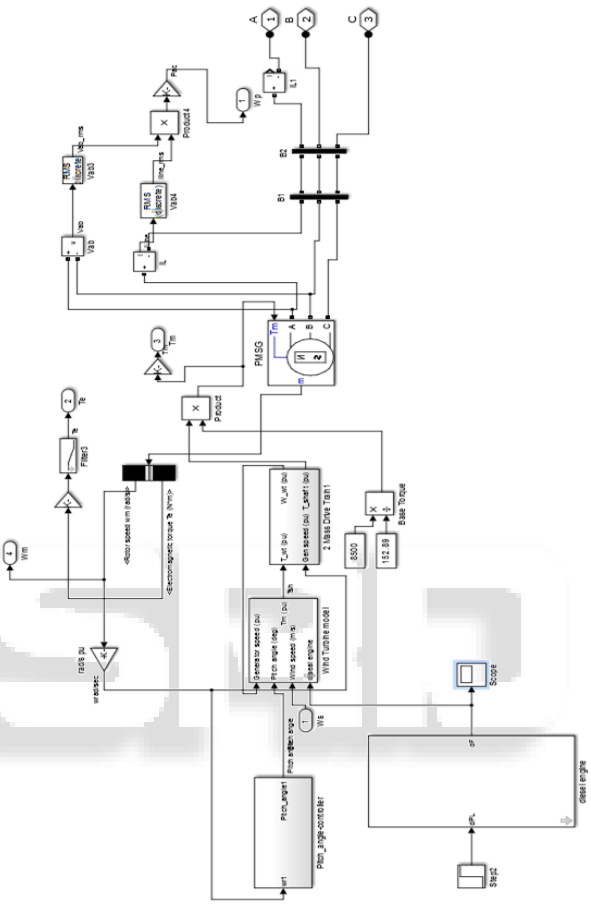

Fig. 4: Simulink model for wind power generation

## III. PROBLEM IDENTIFICATION

In the previous suggested methods there were certain problems. This are discussed below:

1) Power generation is possible at a certain wind speed. Below that generation from diesel is done which results in overloading of the diesel generator. As a result fuel cost increases.
2) It requires a lot of maintenance due to the use of induction generator.
3) Powerfactor were not constant as a result fluctuations in power in receiving side.

## IV. PROPOSED METHODOLOGY

Here the wind turbine generates A.C power which is converted to D.C power by a rectifier. The output of this rectifier is then sent to a dc-dc converter whose major function is to maintain the supply frequency constant. The D.C power output obtained is then send to a three phase inverter where it is converted to A.C power. From there it is

 

supplied to grid where load is connected. Here the power factor is kept constant. In this case PI controller is used. The controller used here checks the error of the output. The basic difference between the conventional PI controller and fuzzy PI controller is that the fuzzy controller is faster than conventional PI. Here a power guide user interface is used. The control of the wind generation is done by pitch angle control and maximum tracking point control. By Maximum power point transfer theorem the maximum power obtained at the output could be determined. Here permanent magnet synchronous generator is used in place of induction generator. Here voltage source converter is used for the reactive power flow. The value of power depends upon parameter of the system.The figure below shows the load connected to the grid. The grid contains three phase load of various forms.

## V. CONTROL METHOD

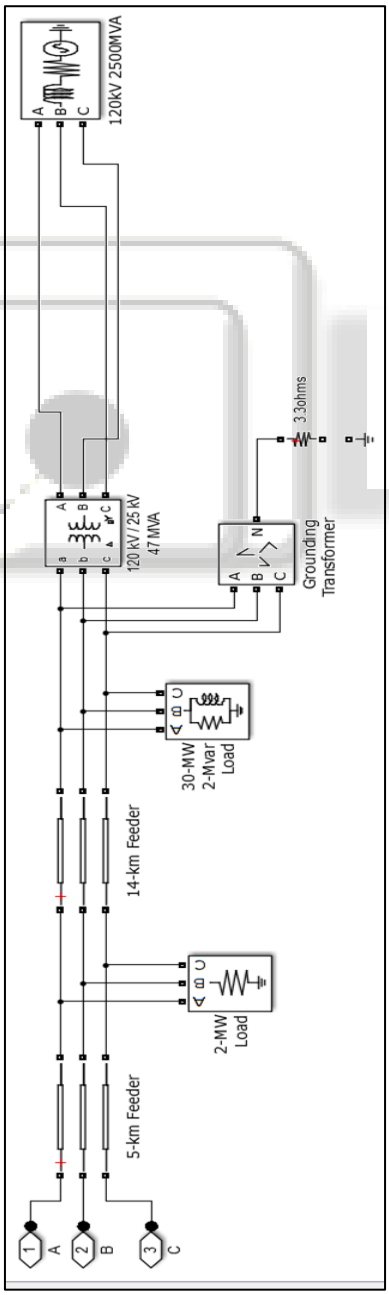


Fig. 5: Load Diagram

The control of hybrid system power generation basically deals with voltage and frequency control. The power obtained at the grid for distribution must have the same freuency as that of the supply system. The voltage source converter controls the system by controlling the reactive power necessary for the power supply. The PI controller is used where the system's speed is not of great concern. It also is used where their is noise present during operation. As the derivative does not contribute to the error therefore PI controller is used. The maximum power obtained at the generation side could be controlled by maximum power point tracking control. It determines the steady state performance of the system during normal as well as fault condition. The speed of the wind power reaching to the generator decides the power output. The pitch angle control is used here as the blades of the wind turbine could be damaged due to the wind velocity. The value of the pitch angle used here is taken from the reference papers. To obtain maximum amount of power the blades are turned back.

## VI. CONCLUSIONS

In this thesis we will see the simulation model for hybrid system with permanent magnet synchronous generator giving constant output voltage. This system will provide power at low wind speed. It will transfer the mode of operation from diesel only to wind diesel mode. This system will make the power factor constant and good as a result generation cost will be less. Due to the use of Permanent magnet synchronous generator the maintenance required for the system will be less frequent which is good as this system is designed for remote locations. This will reduce the overall generation cost.

## REFERENCES

[1] Tiberiu Tudorache, Cristian Roman,"The Numerical Modeling of Transient Regimes of Diesel Generator Sets", Acta Polytechnica Hungarica. Vol. 7, No. 2, 2010
[2] Atul S. Kini, Udaykumar R. Y "Modelling And Performance Analysis of A Wind/Diesel Hybrid Power System" IEEE, Industry Applications Conference.41st IAS Annual Meeting. Conference Record of the 2006,vol. 3, Page(s): 1215 – 1221.
[3] G. S. Stavrakakis, and G. N. Kariniotakis, "A general simulation algorithm of the accurate assessement of isolated diesel-wind turbine systems interaction, Part I: A general multi-machine power system model" IEEE, Transactions on Energy Conversion, Vol. 10, No. 3, September 1995, pp 577 – 583.
[4] Modeling of A Wind Diesel Integrated System With No Storage, Abrar Ahmad1, A.S. Siddiqui2 Department of Electrical Engineering, Jamia Millia Islamia, New Delhi, India.
[5] Eduard Muljadi H. and Edward McKenna. 2002.Power Quality Issues in a Hybrid Power System.IEEE TRANS. on Industry Applications. 38(3).
[6] Bialasiewicz, J.T., Muljadi, E., Drouilhet, S., Nix, G., Modular Simulation of a Hybrid Power Systems with Diesel and Wind Turbine Generation, Windpower'98, 27 April-1 May, Bakersfield, CA, 1998.

 

[7] Kaldellis, J.K., An integrated model for performance simulation of hybrid wind-diesel systems, Renewable Energy, 2006, 32; 1544-1564.
[8] Hunter, R. and Elliot, G. (1994). Wind-Diesel Systems. Cambridge University Press, Cambridge.
[9] R. Sebastian. 2009. Simulation of the Trasition fromWind Only Mode to Wind Diesel System. IEEE Latin America Transactions. 7(5).
[10] L.H. Tay, et al, "Performance analysis of a wind/diesel/battery hybridpower system"
[11] A.J. Bowen, M. Cowie and N. Zakay, "The performance of a remote wind-diesel power system," Renew Energy, Vol. 22, pp. 429–45, 2001.
[12] Apoorva Kanthwal and Aman Ganesh. 2012. Hybrid Wind-Diesel Generation System. International Journal of Applied Engineering Research. 7(11).
[13] R. Sebastian and R. Pena Alzola. 2011. Simulation of an isolated Wind Diesel System with battery energy storage. Electric Power Systems Research. 81(2): 677-686.

 