A Review on Underwater Communication Sensor

Vandana Rajoriya[1] Asst. Prof. Manoj Dhawan[2]
[1]Student [2]Assistant Professor
[1,2]Department of Information Technology
[1,2]ShriVaishnav Institute of Technology & Science Indore, India

Abstract— In our earth 75% secured through water that could be ocean and river too. The UWSNs are empowering innovation and turn out to be more famous for checking unlimited region of oceans. underwater sensor network comprise of a variable various sensors that are sent to perform observing undertakings over a particular region. The underwater sensor network give nonstop checking to different applications for example ocean inspecting system, contamination observing, submarine discovery, disaster aversion and so on.

Key words: Underwater, Signal, Memory

I. INTRODUCTION

Earth is to a great extent secured by water. This is to a great extent unexplored part and as of late people are indicating interest towards investigating it UW-ASN comprise of a variable several sensors that are sent to the perform checking tasks over a assumed range. Numerous calamities that occurred in later past made people to incredibly screen the oceanic situations for logical, ecological, military needs and so forth., keeping in mind the end goal to perform these observing assignment commercial enterprises are demonstrating interest towards conveying sensor hubs under water. TWSNs work in a domain overwhelmed by RF correspondence. On the other different hand, communication of RF is not a perfect correspondence channel for the applications of underwater because of extraordinary degree compelled RF wave's proliferation underwater. Conductive ocean water just at additional low frequencies (30 ¡ 300 Hz), which oblige expansive reception apparatuses and also high transmission power. Consequently, connects in underwater systems are in view of acoustic remote interchanges [1] Acoustic correspondences are the regular physical layer innovation in underwater systems. The acoustic correspondence, while more solid and strong, is transfer speed constrained underwater acoustics rates are between 20kb/s and 5kb/s, which is to a great degree moderate contrasted with over air of RF rate(in Gb/s) [1].

II. APPLICATIONS OF UNDERWATER SENSOR NETWORK

A. Fastest way for finding the Underwater Knowledge:

Underwater sensor is the most recent and speediest method for discovering data which is accessible in underwater sensor organize this data is useful for individual as well as in charge of specialists [2].

B. Disaster Prevention:

Disaster counteractive action is likewise essential attributes of underwater sensor system framework ready to perform seismic action which gives torrent notices to waterfront zones[2].

C. Ocean Sampling Networks:

Self-sufficient underwater vehicles capable for helpful versatile examining of 3D coastal ocean atmosphere. In 3D environment. We can orchestrate the sensor in distinctive diverse profundity in ocean. so we can sense ocean zone at diverse profundity[3].

D. Environmental Monitoring:

Environment checking is a standout amongst the most imperative uses of underwater sensor system. In environment checking incorporate contamination observing, observing of sea streams, enhance climate estimate are other conceivable applications [3].

E. Mine Reconnaissance:

The synchronous operation of different AUVs with acoustics sensor can be utilized to perform fast ecological and identify mine like article [3].

F. Distributed Tactical Surveillance:

AUV and settled underwater sensor can collaboratively screen ranges for observation, surveillance and interruption recognition systems [3].

III. INTERNAL ARCHITECTURE OF UNDERWATER SENSOR

Internal structural engineering of the underwater sensor is demonstrated in fig1. In interior construction modeling CPU-on board controller, sensor interface hardware, acoustics modem, power supply, memory and sensor are primary part[4].

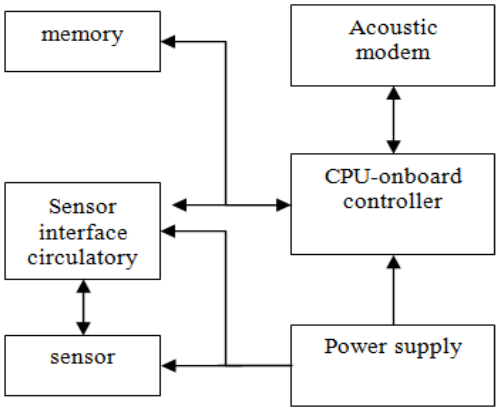

Fig. 1: Internal architecture of underwater sensor

It comprises of the primary controller, which is the interfaced using sensor by sensor interface hardware. The controller or CPU get the information from sensor and also put away it in the memory, method it and send to sensor by acoustics modem. Infrequently all the sensor segment are ensured through instrument of the Bottom-mounted outlines that are configuration to allow an omni-directional correspondences, and shield the sensor and also modem from potential effect of the trawling gear [4].

IV. ROUTING PROTOCOLS IN UNDERWATER SENSOR

There are mostly four protocol families in underwater sensor network.

- Flooding based routing protocols
- Multipath based on routing protocols
- Cluster based on routing protocols
- Miscellaneous based on routing protocols

A. *Flooding based Routing Protocols:*

In flooding based directing conventions the made transmitting the packet to each other hub inside of transmission extent. There are numerous protocol in the flooding based family like (hop-by-hop vector based on forwarding protocol) HH-VBF, (depth based on routing protocol) DBR, (focus beam routing protocol) FBR, (hop-by-hop dynamic address based routing protocol) HH-DAB, (sector-based routing with destination location prediction) SBR-DLP etc.

B. *Multipath based Routing Protocols:*

In the multipath based there is more than one way are setting up from source hub to destination hub. In the multipath based routing contain Winston et al. System, Dario Pompili et al. Scheme, and MPT etc.

C. *Cluster based Routing Protocol:*

In this kind of the plan, there are set of hub. There are two kinds of hub in this plan, group head hub and bunch (cluster) part hub. In the cluster based include (MCCP) minimum cost clustering protocol, (DUCS) distributed underwater clustering scheme, Hydro cast etc.

D. *Miscellaneous based Routing Protocols:*

In the miscellaneous based protocol contain adaptive,(ICRP) information carrying based routing protocol, phero-trail etc.

V. ARCHITECTURE OF UNDERWATER SENSOR

UWSNs architecture scans are characterized in different ways. One classification separates between static, semi-portable, and versatile (mobile) architectures. Another popular underwater sensor network classification technique is to the division Underwater Sensor Network into the 3D(includes depth like a dimension) and also 2D (cover ocean floor). The UWSNs can also be multi-hop, single-hop, or hybrid (multi-hop clusters, single-hop individual sensors). Architectures can be collected into short-term, time-discriminating applications, and also long-term, non-time-basic applications. RF, optical, and also architectures based on the acoustic wave are another approach to take a gander at the accessible underwater sensor system. [3]. Fig. 2.Demonstrates the most widely recognized underwater sensor system structural engineering. The individual hubs are tied down at the ocean depths. They are generally littler in size, battery worked, and they mostly transmit information through acoustic modems. Cluster heads are additionally moored depths of the ocean. In adding to the having acoustic modems. Group heads are furnished with two different acoustic handsets, to be specific a vertical and a level handset. The flat handset is utilized through the bunch (cluster) head or uw-sink to correspond with sensor hubs in order to [5]:

- Send commands and arrangement information to the sensors. This correspondence will occurrence between underwater (cluster) sink and group head to sensors.
- Collect observed information. This correspondence will incident between sensors to bunch head or sink..

The information exchange from hub to group head can be (single-hop) all nodes communicated the multi-hop or cluster head directly. If there should arise an occurrence of multi-hop ways, as in physical sensor systems [6], the information delivered through a source sensor is handed-off through middle sensors until it achieves the uw-sink. Energy savings and expanded system limit yet builds the many-sided quality of the directing usefulness also. The vertical Trans collector is utilized through the uw-sinks to hand-off knowledge to the surface position. The surface position is outfitted with an acoustic handset that has the capacity handle numerous parallel correspondences with the conveyed uw-sinks. Finally a surface or base station will send the detected information to ensure BS through means of the RF signal [5].

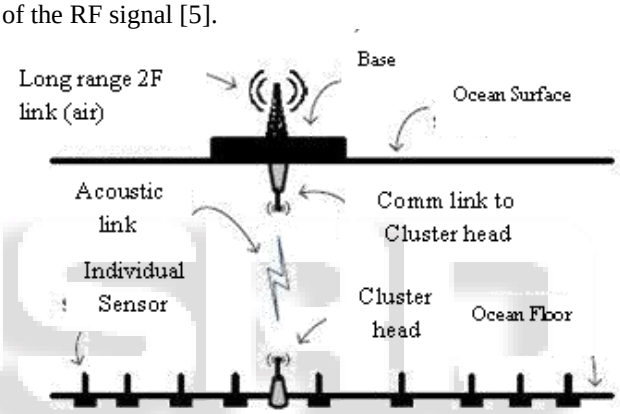

Fig. 2: 2D architecture of underwater sensor network

Unlike TWSNs, the equipment of the bunch (cluster) head hub is not quite the same as every single other hub, in light of the fact that it has extra functionalities, for example, an immediate correspondence join with the ocean surface. Therefore, a most famous (TWSN's cluster head switching) feature which growths the general network lifetime with the efficiently distributing power consumption among the different nodes cannot be utilized in UWSNs. Also, the cluster head is conceivably the most security-helpless part in underwater sensor system s military applications, in light of the fact that it is a solitary purpose of disappointment hub.Fig. 3 shows alternative 3D underwater sensor network architecture. Three dimensional underwater systems are utilized to distinguish and watch phenomena that can't be satisfactorily seen by method for sea base sensor hub, i.e., to perform agreeable testing of 3D sea environment.

In 3D architecture, sensor hub floats at diverse profundity with a specific end goal to watch the given phenomenon. In this construction modeling every sensor is anchored to sea base and furnished with a gliding float that can inflate by a pump. The float pushes sensor towards the surface of ocean. The profundity of the sensor then can be managed by conforming the length of wire that associate the sensor to anchor, through method for an electronically controlled motor that reside on the sensor. [6]

3D structural planning can have all hubs straightforwardly imparts the surface base and also can have just bunch heads convey specifically the base. In the previous case, every hubs are of the similar kind, however correspondence may be more vitality escalated than that of the bunch (cluster) head method. The group head methodology requires just the bunch head to convey a long-extend correspondence modem. Then again, the bunched methodology is helpless against single purpose of disappointment. Military applications are to a great degree touchy to single purpose of disappointment equipment components in 3D building design, sensor hub skim at diverse profundity keeping in mind the end goal to watch the given sensation. In this structural planning every sensor is anchored to the sea base and equipped with a gliding float that can inflate by a pump. The float pushes the sensor towards the sea surface. The profundity of sensor then can be managed by changing the length of wire that associate the sensor to the anchor, through method for an electronically controlled motor that reside on the sensor. [6]

3D structural engineering can have each hubs straightforwardly conveys to the surface base or can have just group heads impart specifically to the base. In the previous case, all hubs are of the same sort, however correspondence may be more vitality serious that of the group head approach. The bunch head methodology requires just the group head to convey a long-extend correspondence modem. Then again, the bunched methodology is defenseless against single purpose of disappointment. Military applications are to a great degree delicate to single purpose of disappointment equipment segments.

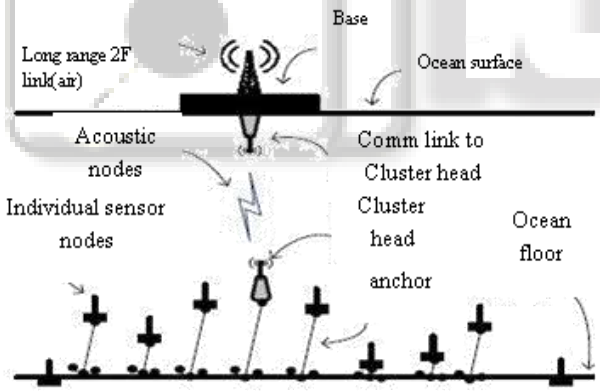

Fig 3: 3D architecture of underwater sensor network

Numerous difficulties emerge with such a construction modeling, that should be understood to empower 3D observing, including:

Sensing coverage: Sensors should collaboratively direct their profundity keeping in mind the end goal to accomplish the full segment scope as per their detecting reaches. Consequently it conceivable to acquire examining of sought marvel by any means.

Communication coverage: Since in the 3D underwater systems there is no idea of uw-sink, sensors information to the surface should be able to knowledge to the surface station by means of multihop ways. In this way, network devices should organize their profundities such a route, to the point that the system topology constantly joined, i.e., no less than one way from each sensor to the surface station dependably exists.

The another architecture uses UUVs and AUVs as network nodes. Fig.4 present an architectural example. The basic significant factor in this kind of architecture is a node's mobility. In the network Mobile node puts additional controlling complexity. In extra the network consumes more the power because of consume additional power because of mobile node in the water movement or force. Moreover the mobile node is shorter lifetime and less reliable.

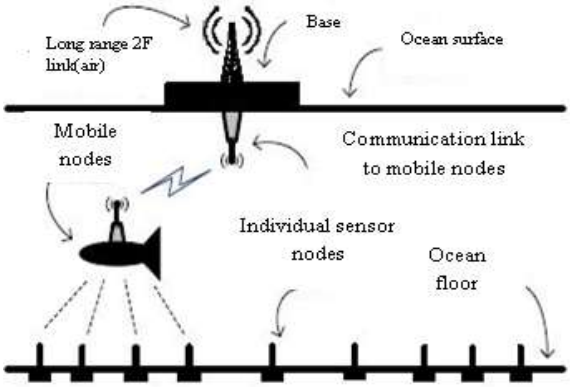

Fig. 4: Mobile architecture of y the UWSNs

Both static and mobile architectures have some disadvantages and advantages. So, we requisite hybrid architecture to highlight or underline the benefits of both architectures. In the hybrid architecture that contain uses both static node and the mobile node through which we can our sensed information transmit efficiently from the floor sensor to the surface station [6]. In this structural engineering the portable hub navigating over static sensor or the static field and achieve the point-to-point correspondence. The static sensor hubs transmit the information to the water surface station through versatile hub [7].

The physical sensor system and underwater sensor system are distinctive in numerous factors. The comparisons between physical sensor system and underwater sensor system are bellow.[2].

A. *Signal:*

In the physical sensor arrange there are the radio sign will be utilized yet as a part of underwater sensor organize there are acoustics sign will be utilized on the grounds that radio sign will work with additional low recurrence so it can't travel far in the underwater so it is not achievable.

B. *Power:*

In the underwater sensor system power needed is more contrast with the physical sensor system on the grounds that the sign will going in water medium and another different reason is high separation among sensors and also complex atmosphere.

C. *Memory:*

In physical sensor has constrained capacity limit however an underwater sensor may should have the capacity to do some information storing along these lines, its require extra memory.

D. *Cost:*

Underwater sensors are all the more expensive though physical sensors are not all the more immoderate contrast

with Underwater sensors and besides the Underwater sensor requires extra equipment insurance system.

Today most increasing demand to the few particular routing protocol, which can work efficiently. For the recent point of research scenario UWSNs with some routing protocol presented which play some particular role in the UWSNs [10].

VI. RELATED WORK

We construct our examination headings on related work from two noteworthy groups: oceanographic researchers and also the WSN community.

A. Oceanographic Research

Oceanographic researchers have industrialized underwater sensing and communication schemes. An example is the OceanSeismic Network program [9]. It industrialized seismic observatories in deep ocean, as a Global Seismic Network (GSN) part . Global Seismic Network has 128 laboratories "uniformly" distributed on the continents, islands or in the ocean, with a leave-taking expanse of 2000km.Its objective is to screen an immense territory on earth. In contrast, our sensor system covers a much littler zone, and hubs are thickly sent in a specially appointed design. Underwater acoustic correspondence is another related region.

The essential correspondence standards have been inspected with acoustic channels in [9], [10], [11], [12]. Their significant center is the transmission range, data transfer capacity use and unwavering quality with multi-way propagations. There is also experimental and also commercial off-the-shelf acoustic modems obtainable today, such as [13], [14]. However, they are designed for the long range communications (1–90km), and also have weights of over 4kg. In our equipment plan, we concentrate on short range, low-control modules in a little bundle. This ability is an empowering component for enduring sensor systems.

The NEPTUNE project [15] built an UWSNs with each node being connected through fiber-optic submarine cables. Follow-on work to NEPTUNE network extended wired network with the little battery-powered nodes with the acoustic communications. In [16], the authors discussed the modulations reliability and efficiency, and also briefly compared classical MAC protocols. The basic difference of our sensor network model is that there will be no expensive cables laying on the sea floor. Most nodes will be cheap, small and also battery-powered for simply deployment. Our work is focused on the network self-organization, longevity, and also multi-hop communications.

B. Wireless Sensor Networks

So far, most work in the sensor network community has focused on the terrestrial sensor networks. Effectively each *platforms* use radio communications. The UC Berkeley motes [17], [18] are based on the 8-bit short-range radios and microcontrollers. 32- bit platforms are usually embedded PCs, such as PC/104s and also Stargates [18]. Although the radio propagation in the water is very bad, the motes are still used through researchers in the marine microorganism monitoring applications. We plan to extend sensor network platforms with a short-range acoustic communication device, low-power, so that large-scale underwater experiments and also applications become possible. There are numerous *networking protocols and also algorithms* directly related to the our proposed research. In fine-grained time synchronization algorithms, RBS synchronizes different receivers to a common reference broadcast signal, and TPSN is based on sender and receiver pairs [19]. As discussed in Section VB, both of them do not handle the errors caused by the large propagation delay. A fine-grained localization algorithm [20], [21] measure the TOA, and relies on fine-grained time synchronization. Their performances are not evaluated with underwater acoustic communications.

Present research in MAC layer is mostly on contention based protocols, although TDMA protocols have been studied [22]. The main focus is energy effectiveness, and numerous low duty- cycle technique have been proposed, such as S-MAC [23], [24], T-MAC [34], WiseMAC [25], and B-MAC [26]. Novel methods need to be developed to the accommodate high propagation delays. Prior work on the *low-duty-cycle process* goals to offer the illusion of constant network access with MAC-level wake up/sleep. An application-level method exploits dense deployment through putting redundant nodes into sleep [27], [28], [29]. Now we are dealing with much higher sleep time with no application actions at the time of sleeping. None of the above protocols are optimized for this applications kind. We must have novel protocols to the completely shut down and also quickly restart the network. Another area of related work is the DTN [30]. It outlines a generic architecture for the store-and forward information delivery. However, we need to further investigate significant application-level scheduling issues in the underwater atmosphere.

C. Underwater Networks

There is some prior work in the UWANs. In [31], the authors reviewed MAC, routing, and for ad hoc networks energy consumption. In, the authors studied latency effects in the acoustic communications and also a topology discovery algorithm proposed. In [26], the authors proposed a clustering protocol with combined CDMA and TDMA for a collection of autonomous underwater vehicles. Codiga et al. have demonstrated small-scale networks off Long Island [25]. This research consider an ad hoc networking model with small to moderate various nodes. In contrast, our sensor network model consists of hundreds to thousands of nodes, and our application has various requirements. More presentaly, concurrent with the our work, Kong et al. Have outlined a research direction in the underwater ad hoc networking [31], emphasizing simulation of location-based routing, localization, and security in military applications. Instead our work focuses on prototype hardware and also adds time synchronization and other different applications.

VII. CONCLUSION

The growth in underwater communication is increasing its importance day by day due to its application include commercial, industrial and defense fields. In this paper we present the underwater sensor system. Also We exhibit the fundamental use of underwater sensor system. In this paper we also presented the structural planning of underwater sensor system, routing family and fundamental difficulties of UWSNs. We plan to the continue our underwater sensor

network study. We expect a fair quantity of time on the physical layer, because numerous tasks outlined in this paper are directly related to UWSNs physical layer. .

REFERENCES

[1] I.F akyildiz,D.pompili and T.melodia, underwater sensor netwoks: Research challenges, Elsevier,vol.ad hoc networks,no.3,pp.257-279,february 2005.
[2] YoncaBayrakdar, Nirvana Meratnia, AylinKantarci,A "comparative view of routing protocols for underwater wireless sensor networks" .978-1-61284-4577 00880/11/,2011IEEE.
[3] Ian F. Akyildiz, Dario Pompili, TommasoMelodia, State of the Art in Protocol Research for Underwater Acoustic Sensor Networks, WUWNet06, September 25, 2006, Los Angeles, California, USA, ACM 1-59593-484-7/06/0009.
[4] Rakesh V.S,Srimathi.C "A survey on underwater sensor and architecture and protocols" International journal of computer science and engineering technology(IJCSET)-Vol.4no.2 february-2013.
[5] J.H. Cui, J.Kong ,M.Gerla, and S.Zhou, "The building mobile underwater wireless networks applications" IEEE network ,vol. 20,no. 3,pp.12-2006
[6] Almirdevis, hwachang-"Underwater wireless sensor network" IEEE 2012.
[7] A.Gkikopouli,G.Nikolakopoulos and S.Manesis "Survey on wireless sensor network and application"IEEE july2012
[8] Amansharma, Abdulgaffar.H –"Survey on routing protocol for underwater sensor network" International journal of computer science and communication network –Vol 2(1),74-82
[9] R. A. Stephen. Ocean seismic network seafloor observatories. Oceanus, 41(1):33–37, Spring 1998.
[10] J. Catipovic, D. Brady, and S. Etchemendy. Development of underwater acoustic modems and networks. Oceanography, 6:112–119, Mar. 1993.
[11] M. Stojanovic. Recent advances in high-speed underwater acoustic communications. IEEE Journal of Oceanic Engineering, 21:125–136, Apr. 1996.
[12] M. Stojanovic, J. G. Proakis, J. A. Rice, and M. D. Green. Spread spectrum methods for underwater acoustic. In Proceedings of the IEEE OCEANS'98 Conference, pages 650–654, Nice France, Sept. 1998.
[13] Benthos, Inc. Fast And Reliable Access To Undersea Data. http:www.benthos.com/pdf/Modems/ModemBrochure.pdf.
[14] LinkQuest, Inc. Underwater Acoustic Modems. http://www. link-quest.com/html/uwm hr.pdf.
[15] J. R. Delaney and A. D. Chave. Neptune: A fiber-optic 'telescope' to inner space. Oceanus, 42(1):10–11, spring 2000
[16] L. Freitag, M. Stojanovic, M. Grund, and S. Singh. Acoustic communications for regional undersea observatories. In Proceedings of the Oceanology International, London, U.K., Mar. 2002.
[17] J. Hill, R. Szewczyk, A. Woo, S. Hollar, D. Culler, and K. Pister. System architecture directions for networked sensors. In Proceedings of the 9th International Conference on Architectural Support for Programming Languages and Operating Systems, pages 93–104, Cambridge, MA, USA, Nov. 2000.
[18] Crossbow Technologies, Inc. http://www.xbow.com/.
[19] J. Elson, L. Girod, and D. Estrin. Fine-grained network time synchronization using reference broadcast. In Proceedings of the fifth USENIX Symposium on Operating System Design and Implementation (OSDI) Boston, MA, Dec. 2002.
[20] A. Savvides, C.-C.Han, and M. B. Srivastava. Dynamic fine-grained localization in ad-hoc networks of sensors. In Proceedings of the 7th ACM International Conference on Mobile Computing and Networking, pages 166–179, Rome, Italy, July 2001.
[21] L. Girod and D. Estrin. Robust range estimation using acoustic and multimodal sensing. In Proceedings of the IEEE/RSJ International Conference on Intelligent Robots and Systems, Maui, Hawaii, Oct. 2001.
[22] V. Rajendran, K. Obraczka, and J. Garcia-Luna-Aceves. Energy-efficient, collision-free medium access control for wireless sensor networks. In Proceedings of the first ACM Conference on Embedded Networked Sensor Systems (SenSys), Los Angeles, CA, Nov. 2003.
[23] W. Ye, J. Heidemann, and D. Estrin. An energy-efficient mac protocol for wireless sensor networks. In Proceedings of the IEEE Infocom, page 1567–1576, New York, NY, June 2002.
[24] W. Ye, J. Heidemann, and D. Estrin. Medium access control with coordinated adaptive sleeping for wireless sensor networks. ACM/IEEE Transactions on Networking, 12(3):493–506, June 2004
[25] A. El-Hoiydi. Spatial TDMA and CSMA with preamble sampling for low power ad hoc wireless sensor networks. In Proceedings of the Seventh International Symposium on Computers and Communications (ISCC), pages 685–692, July 2002.
[26] J. Polastre, J. Hill, and D. Culler. Versatile low power media access for wireless sensor networks. In Proceedings of the 2nd ACM Conference on Embedded Networked Sensor Systems (SenSys), pages 95–107, Baltimore,MD, USA, Nov. 2004.
[27] A. Quazi and W. Konrad. Underwater acoustic communications. IEEE Communications Magazine, 20(2):24–30, Mar. 1982.
[28] V. Rajendran, K. Obraczka, and J. Garcia-Luna-Aceves. Energy-efficient, collision-free medium access control for wireless sensor networks. In Proceedings of the first ACM Conference on Embedded Networked Sensor Systems (SenSys), Los Angeles, CA, Nov. 2003.
[29] F. Salva-Garau and M. Stojanovic. Multi-cluster protocol for ad hoc mobile underwater acoustic networks. In Proceedings of the IEEE OCEANS'03 Conference, San Diego, CA, Sept. 2003.
[30] A. Savvides, C.-C.Han, and M. B. Srivastava. Dynamic fine-grained localization in ad-hoc networks of sensors. In Proceedings of the 7th ACM International Conference on Mobile Computing and Networking, pages 166–179, Rome, Italy, July 2001.
[31] E. M. Sozer, M. Stojanovic, and J. G. Proakis. Underwater acoustic networks. IEEE Journal of Oceanic Engineering, 25(1):72–83, Jan. 2000.

