Wireless Communication between PC and Microcontroller

Anuj Sharma[1] Manendra Singh[2] Ashish Gupta[3] Ayush Sharma[4] Engg. Nitin Agarwal[5]
[1,2,3,4]Student [5]Assistant Professor
[1,2,3,4,5]Department of Electronics & Communication Engineering
[1,2,3,4,5]R.B.S ENGG. Technical Campus, Bichpuri, India

Abstract— When people have a good connectivity at their disposal, with tremendous power of mobile computing to supplement the same, we can think of connecting their home appliances to the personal computer or a laptop". With this, people would be able to turn on and off, and to some extent, control the appliances at their home even from a distant place. One of the very basic examples of an utility of this is switching on the air conditioner in the room just some time before reaching home, so that the room is sufficiently cool by then. The usefulness of a long range remote control to home appliances has no limits. A trivial setup facilitating such a thing would be to connect the home appliances, to a microcontroller receiver antenna that receives the controls from the user, the means of sending the transmitted signals to the appliances may be via a circuit or through a wireless media like Infra-Red or the RF, We have had Infra-Red Remote Controls, which work over very short distances, and Radio Wave Remote Controls, which work over larger distances. However, something fundamentally common with all these controls is that the transmitter and receiver should both use some kind of wireless waves. The project is an implementation to the idea of the wireless communication between a PC and a microcontroller. The project deals with displaying this possible wireless communication by transferring message from PC to the LCD through wireless media.

Key words: Microcontrollers, Ad Hoc Networks, Transmitter

I. INTRODUCTION

Computers and the related technologies are becoming more and more ambiquitous.

Various technical arenas in the field of Computer Science and Engineering, or Information Technology have come very near to the common people. The number of homes with Personal Computers is gradually increasing. A day will come, somewhere in the long future" when PC is referred to in the same class of Food, clothing and shelter". Improvements in the Networking technologies have fostered growth of very dense networks. Land line telephones have been becoming less and less popular and people now prefer communicating while on the move.

A Remote Control is perhaps the most popular gadget today. Right from the intense creativity of remotely controlling laser chip markers to the highly destructive remotely ignitable bombs, from the pins to the planes, remote control is not only occupying a omnipresence state, but is also enhancing its scope and domains. This project is considered as a proof of concept that it is used to mobilize the control of many appliances at a time. This project is work at a radio frequency with the speed of 9600 bit rate per second. In this project it consists of two working parts i.e., Transmitter and Receiver and it both of them consist of some kind of wireless waves.

A. Keywords:

1) *Inspec: Controlled Indexing*
   - ad hoc networks
   - computerized monitoring
   - control engineering computing
   - data communication
   - microcontrollers
   - radio communication
2) *Inspec: Non Controlled Indexing*
   - Bluetooth
   - ad hoc continuous monitoring
   - cabling drawbacks
   - hydraulic positioning system
   - microcontroller
   - personal computer
   - wireless communication
   - wireless transmission speed

B. Objective of the Research Work:

The main objective of this Wireless Communication between PC and Micro Controller Project is to provide wireless communication between PC and MCU. This electronics application implemented by using RF technique on embedded system. The main advantage of this application is to use in college computer science, electronics labs where students typing data can be displayed on the LCD screens and it can useful like a wireless notice board in schools and colleges. This project comes under embedded system technology. The main objective of displaying characters on the display unit is practically tested and achieved. The data typed in the hyper terminal is transmitted and displayed on the display screen. The data is overwritten once the 16 bits are displayed. A trivial setup facilitating such a thing would be to connect the home appliances, to a microcontroller receiver antenna that receives the controls from the user, the means of sending the transmitted signals to the appliances may be via a circuit or through a wireless media like Infra Red or the RF, We have had Infra Red Remote Controls, which work over very short distances, and Radio Wave Remote Controls, which work over larger distance.

II. METHODOLOGY

In this Project we described PC-MC based wireless communication as a project that helps us talk to devices that are connected to a remote computer. A careful implementation of the idea suggested by the project can prove to be very beneficial in promoting home automation and similar activities. This project can be considered as a proof of concept, {the concept that it is possible to mobilize the control of appliances). By employing various coding techniques this can be produce security. The project is an implementation to the idea of the wireless communication

between a PC and a microcontroller. The project deals with displaying this possible wireless communication by transferring message from PC to the LCD through wireless media. We used Microcontroller unit (AT89C51), LCD s {Liquid Crystal Display}, LM7805 Regulator IC, resistors, capacitors, diodes, RF module. To write, test, simulate and debug the code, we used Kiel Complier and the programming was done in C language.

A. Transmitter:

The main objective of the project is to see that the data transmission from one point to other is made possible. This needs a transmitter and a receiver, the transmitter takes the data from the microcontroller and transmits the data to the receiver side where the receiver receives the data. We employ an RF module, which operates at a predetermined RF frequency. The transmitter and the receiver must be synchronized. The range of the communication of the wireless communication is directly proportional to the size of the antenna employed at the transmitter and receiver sides. The RF transmitter employed also needs a voltage feed of +5 volts to modulate the data received from the microcontroller to avoid the interference of noise and other signals. Depending upon the employed RF module, different type of modulation like OOK (on-off keying), amplitude modulation, or frequency modulation is done.

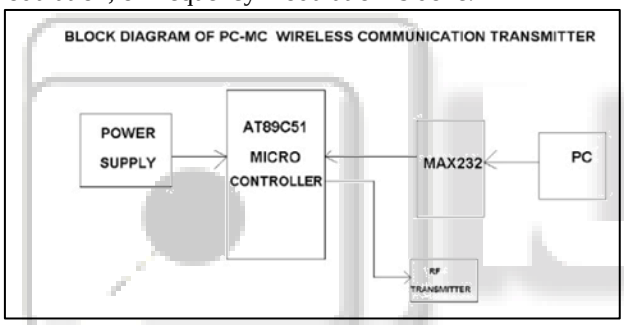

Fig. 1: Block Diagram of PC-MC Wireless Communication Transmitter

B. Transmitter Section:

The transmitter section of the project mainly consists of the following blocks:

- Personal computer or laptop
- Micro Controller
- Power supply
- Transmitter

Fig. 2: Transmitter Module

C. Personal Computer:

PC is the main element of the communication between the PC and the Micro-Controller, PC sends the data to be transmitted to the receiver side device, but the data cannot be transmitted directly from the computer, so it employs a serial communication with the Micro Controller. This requires a Micro Controller to be connected to the PC, so that it is programmed in order to receive data from the computer and transmit the data to the receiver section through the transmitting antenna.

III. MICRO CONTROLLER

The micro controller is a programmable device that performs a specific task. In the transmitter section of the arrangement, the microcontroller is used to receive data from the personal computer and the data is transmitted further through the transmitter. The microcontroller operates on +5volts that is provided by the power supply. The communication between the microcontroller and the pc is serial and this is done using the connector 'RS 232' that receives the data from the hyper terminal of the pc. The RS 232 and the microcontroller have a difference in the voltage levels for the binary digits 0 and 1. So we employ MAX 232, a TTL converter between them, so that the data is received by the microcontroller is valid. The TTL converter converts the voltage levels of the RS 232 to match to that of the microcontroller.

A. Power Supply:

The microcontroller needs a +5 volts DC voltage supply to operate its internal flip flops and other circuits. The voltage can be supplied from a DC voltage source or through a converter that converts the AC to +5 volts DC voltage. In order to supply the DC voltage, we employed a Bridge rectifier that converts the AC to DC and the output of the rectifier could not be taken directly due to the fluctuations of the voltage levels of the converted signal, to overcome this, a voltage regulator is employed that converts the pulsated voltage into +5 volts that could be fed to the microcontroller.

The circuit diagram of the power supply is as shown.

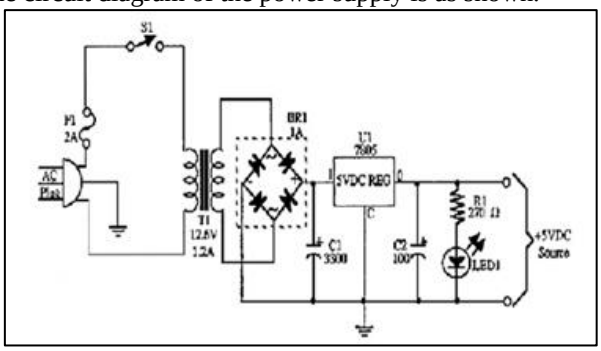

Fig. 3: Power supply

B. Receiver:

In the receiver section, the receivers play a vital role of receiving the data transmitted by the transmitter from the air. This must be very effective in receiving the modulated signal from the transmitter and performing the demodulation on it and sending the data to the microcontroller. The receiver, similar to that of the transmitter needs a supply feed to demodulate and transfer the data to the

microcontroller, this is done by the power supply at the receiver section.

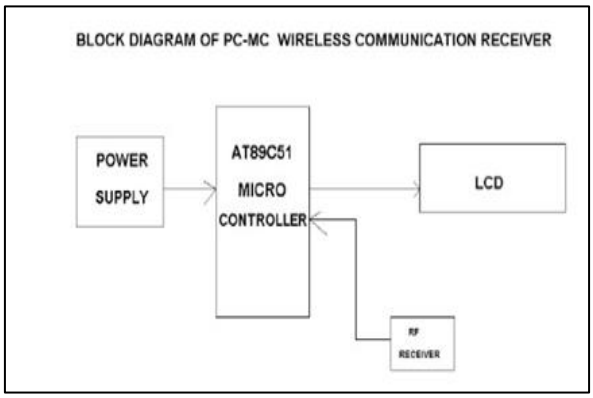

Fig. 4: Block Diagram of PC-MC Wireless Communication Receiver

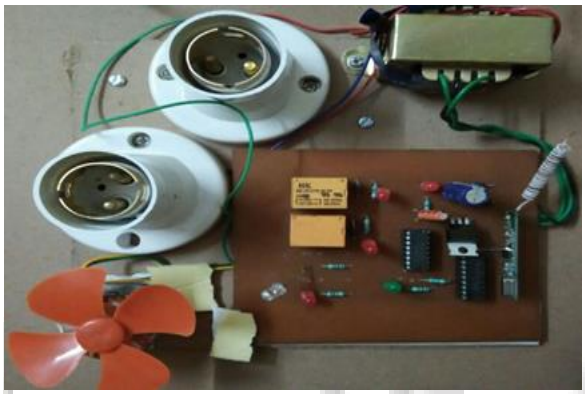

Fig. 5: Receiver Module

C. *Microcontroller:*

The receiver side microcontroller is programmed in such a way that it receives the data from the receiver and sends back the data to the LCD to display the message. The micro controller controls the data that is sent to the display unit. The microcontroller needs the power supply of+5 volts similar to that of that at the transmitter side. Hence a power supply device that supplies the required voltage to the microcontroller is employed at the receiver side.

D. *LCD (Liquid Crystal Display):*

LCD stands for Liquid Crystal Display. The display takes the commands and data to be displayed on the display screen from the microcontroller. This is a user interface that shows the data typed in at the transmitter side in the hyper terminal of the PC.

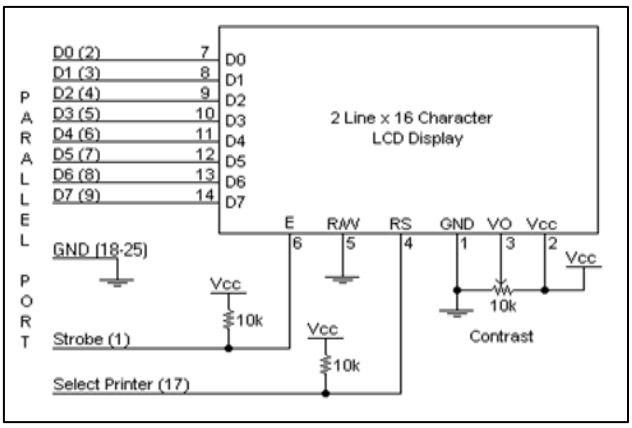

Fig. 6: Pin Diagram

E. *Pin Description:*

Pin	Symbol	I/O	Description
1	GND	-	Ground
2	Vcc	-	+5V power supply
3	VEE	-	Contrast control
4	RS	I	command/data register selection
5	R/W	I	write/read selection
6	E	I/O	Enable
7	DB0	I/O	The 8-bit data bus
8	DB1	I/O	The 8-bit data bus
9	DB2	I/O	The 8-bit data bus
10	DB3	I/O	The 8-bit data bus
11	DB4	I/O	The 8-bit data bus
12	DB5	I/O	The 8-bit data bus
13	DB6	I/O	The 8-bit data bus
14	DB7	I/O	The 8-bit data bus

As you would probably guess from this description, the interface is a parallel bus, allowing simple and fast reading/writing of data to and from the LCD.

Above is the quite simple schematic pin diagram. The LCD panel's Enable and Register Select is connected to the Control Port. The Control Port is an open collector / open drain output. While most Parallel Ports have internal pull-up resistors, there are a few which don't. Therefore by incorporating the two 10K external pull up resistors, the circuit is more portable for a wider range of computers, some of which may have no internal pull up resistors.

We make no effort to place the Data bus into reverse direction. Therefore we hard wire the R/W line of the LCD panel, into write mode. This will cause no bus conflicts on the data lines. As a result we cannot read back the LCD's internal Busy Flag, which tells us if the LCD has accepted and finished processing the last instruction. This problem is overcome by inserting known delays into our program.

The 10k Potentiometer controls the contrast of the LCD panel. Nothing fancy here. You can use a bench power supply set to 5v or use a onboard +5 regulator.

The 2 line x 16 character LCD modules are available from a wide range of manufacturers and should all be compatible with the HD44780. The diagram to the right, shows the pin numbers for these devices. When viewed from the front, the left pin is pin 14 and the right pin is pin 1.

LCDs can be added quite easily to an application and use as few as three digital output pins for control. As for cost, LCDs can be often pulled out of old devices or found in surplus stores for less than a dollar. The most common connector used for the 44780-based LCDs is 14 pins in a row, with pin centers 0.100" apart.

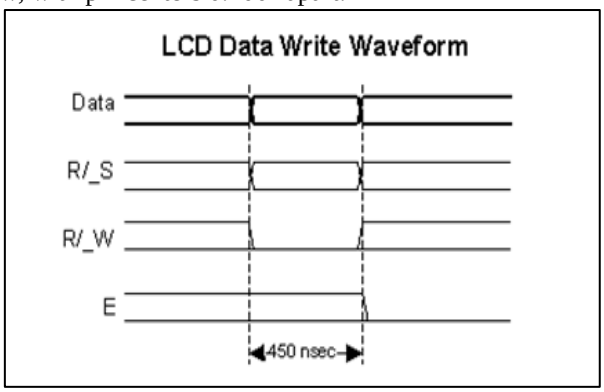

Fig. 7: LCD Data Write Waveform

F. Receiver Section:

In the designing of the Receiver section of the message communication, we employ the following components and equipment.

- Power Supply +5 volts DC.
- RS 232.
- MAX 232.
- Micro Controller AT89C51.
- RF transmitter.

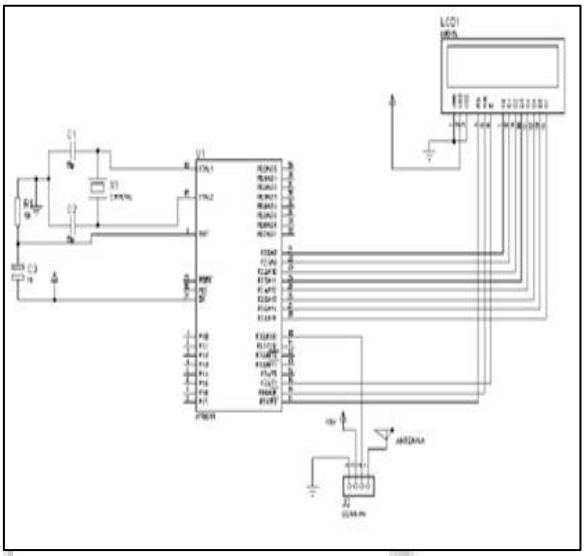

Fig. 8: Receiver Section

G. Power Supply:

Most digital logic circuits and processors need a 5 volt power supply. To use these parts we need to build a regulated 5 volt source. The available ac source cannot be directly utilized by the micro controller as a feed. It needs to be converted to +5 volts DC source. The bridge rectifier is used to convert the ac to pulsating dc. A bridge rectifier makes use of four diodes in a bridge arrangement to achieve full-wave rectification. This is a widely used configuration, both with individual diodes wired as shown and with single component bridges where the diode bridge is wired internally. The pulsating dc is an unregulated power supply ranging from 9 volts to 24 volts DC. To make a 5 volt power supply, we use a LM7805 voltage regulator IC (Integrated Circuit).The IC is shown below.

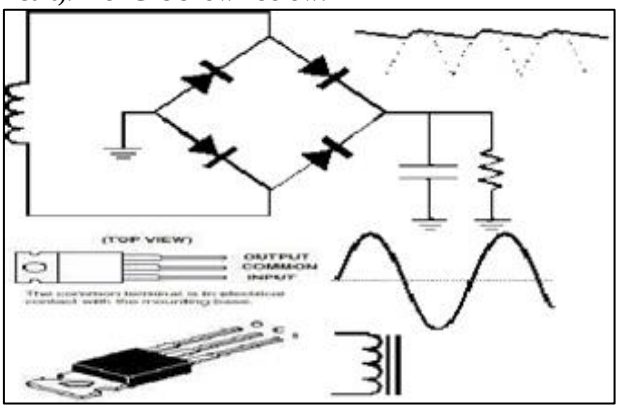

Fig. 9: Power Supply

The LM7805 is simple to use. You simply connect the positive lead of your unregulated DC power supply (anything from 9VDC to 24VDC) to the Input pin, connect the negative lead to the Common pin and then when you turn on the power, you get a 5 volt supply from the Output pin. Sometimes the input supply line may be noisy. To help smooth out this noise and get a better 5 volt output, a capacitor is usually added to the circuit, going between the 5 volt output and ground (GND). We use a 220 uF capacitor.

IV. MICRO-CONTROLLER (AT89C51)

A micro-controller (also MCU or µC) is a functional computer system-on-a-chip. It contains a processor core, memory, and programmable input/output peripherals. Microcontrollers include an integrated CPU, memory (a small amount of RAM, program memory, or both) and peripherals capable of input and output. It emphasizes high integration, in contrast to a microprocessor which only contains a CPU (the kind used in a PC). In addition to the usual arithmetic and logic elements of a general purpose microprocessor, the microcontroller integrates additional elements such as read-write memory for data storage, read-only memory for program storage, Flash memory for permanent data storage, peripherals, and input/output interfaces. At clock speeds of as little as 32 KHz, microcontrollers often operate at very low speed compared to microprocessors, but this is adequate for typical applications. They consume relatively little power (milli-watts or even microwatts), and will generally have the ability to retain functionality while waiting for an event such as a button press or interrupt. Power consumption while sleeping (CPU and peripherals off) may be just nano watts, making them ideal for low power and long lasting battery applications.

Microcontrollers are used in automatically controlled products and devices, such as automobile engine control systems, remote controls, office machines, appliances, power tools, and toys. By reducing the size, cost, and power consumption compared to a design using a separate microprocessor, memory, and input/output devices, microcontrollers make it economical to electronically control many more processes. There are many commercially available microcontrollers in the market. The AT89C51 is a low-power, high-performance CMOS 8-bit microcomputer with 4Kbytes of Flash Programmable and Erasable Read Only Memory (PEROM). The device is manufactured using Atmel's high density nonvolatile memory technology and is compatible with the industry standard MCS-51™ instruction set and pin out. The on-chip Flash allows the program memory to be reprogrammed in-system or by a conventional nonvolatile memory programmer. By combining a versatile 8-bit CPU with Flash on a monolithic chip, the Atmel AT89C51 is a powerful microcomputer which provides a highly flexible and cost effective solution to many embedded control applications.

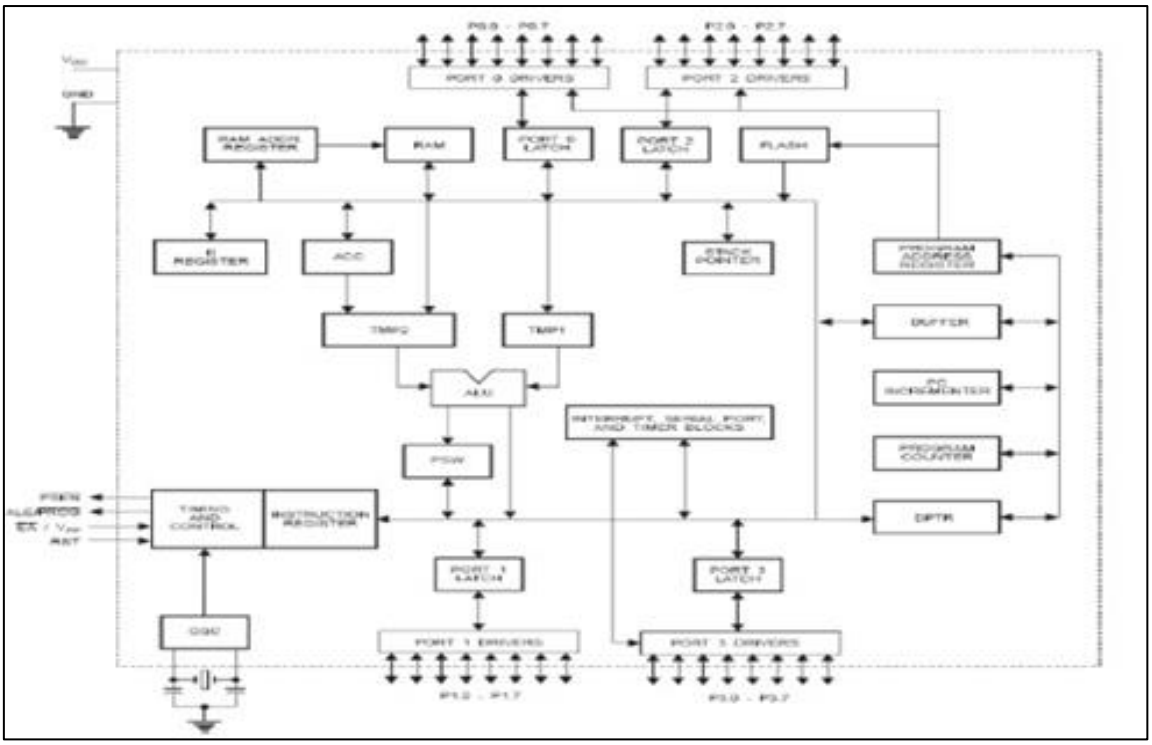

Fig. 10: Micro-Controller (AT89C51)

A. *RF Transmitter Design:*

The TWS-434 and RWS-434 are extremely small, and are excellent for applications requiring short-range RF remote controls. The transmitter module is only 1/3 the size of a standard postage stamp, and can easily be placed inside a small plastic enclosure.

V. PROGRAMMING THE MICROCONTROLLER

The microcontroller is a programmable device with certain specifications and design rules. The microcontroller used in developing the project is AT89C51. It contains a programmable flash memory, into which the program code could be dumped. The code can be written in assembly language or in C language and then convert it to a hex file after compiling it and then be written on the flash ROM of the microcontroller.

To write, test, simulate and debug the code, we used Kiel Complier and the programming was done in C language.

A. *Kiel Software:*

An assembler is a software tool designed to simplify the task of writing computer programs. It translates symbolic code into executable object code. This object code may then be programmed into a microcontroller and executed. Assembly language programs translate directly into CPU instructions which instruct the processor what operations to perform. Therefore, to effectively write assembly programs, you should be familiar with both the microcomputer architecture and the assembly language.

B. *Universal Device Controller:*

1) *Results:*

The purpose of the project is achieved. The main objective of displaying characters on the display unit is practically tested and achieved. The data typed in the hyper terminal is transmitted and displayed on the display screen. The data is overwritten once the 16 bits are displayed. We tested these modules using a 14", solid, 24 gauge hobby type wire, and reached a range of over 400 foot. Your results may vary depending on your surroundings. The range can be improved by employing antenna of greater length.

2) *Conclusion and Future Scope:*

In this report, we described PC¬¬¬¬-MC based wireless communication as a project that helps us talk to devices that are connected to a remote computer. A careful implementation of the idea suggested by the project can prove to be very beneficial in promoting home automation and similar activities. This project can be considered as a proof of concept, {the concept that it is possible to mobilize the control of appliances). By employing various coding techniques this can be produce security.

C. *After Thoughts:*

If we were to do this project again, we would probably consider finding a pair of transceivers that operates on different frequencies. This would simplify the logic and avail communication from simplex to full duplex from one end.

We would also change it so that it can communicate with more than one other device. This should not be too difficult, since all we have to do is to include the target device's identification number when we are about to send a message. That way, only the target device will pick up the transmission. We would employ a coding technique uniquely decoded by the target device. This makes the communication secure.

REFERENCES

[1] EMBEDDED PC BASED WIRELESS COMMUNICATION USING XTEA KHOK JESS LYN, Faculty of Electrical & Electronics Engineering University Malaysia Pahang.

[2] Communication b/w Mobile Robot's and PC controller Based on Zig Bee Network H. Vijay a Lamia, M. Na renders International Journal of Engineering Research and Applications (IJERA) ISSN: 2248-9622
[3] Microcontroller Picture 18f4550 Based Wireless Sensor Node to Monitor Industrial Environmental Parameters P.V. Mane- Deshmukh, B. P. Ladgaonkar*, S. C. Nathan, S. S. Sheikh International Journal of Advanced Research in Computer Science and Software Engineering Volume 3, Issue 10, October 2013 ISSN: 2277 128X.
[4] Oregon State Trek bots.
[5] Artificial Intelligence –Elian Rich & Kevin Knight, Tata Mc Grew Hill, 2nd Edition.
[6] The 8051Microcontroller by Kenneth J. Ayala
[7] A. Clark and R. H. arum, Assessment of kale manlier channel estimators for an HF radio link," IEE ProceeSSdings, vol. 133, pp. 513{521, Oct 1986.

