Power Harvesting Through Regenerative Energy Sources

R.Arvind[1] N.L.Divya[2] Chinni Sudheer[3] Mrs.Pavithra[4]
[1,2,3,4]Department of Electronics and Communication Engineering
[1,2,3,4]Saveetha School of Engineering, Saveetha University, Chennai-602105

Abstract— In today's scenario, there is more and more interest being taken to produce current in alternate forms rather than getting directly and environment friendly technologies may be incorporated. One of the best methodologies to generate electricity by using human walking. When humans walk, they produce a lot of energy which is of no use. This kinetic mechanical energy derived from human walking can be used to generate energy to run home appliances like charging a mobilephone. This system involves designing a charging system which is powered via a piezoelectric and that is capable of charging more than one batteries at the same time. In this proposed system, The surface under the foot path collect energy from the vibrations, The piezoelectric charging panels channel energy batteries which can be used further. Our system measures the power level produced and monitors it frequently. Here alternative sources like noise can also be added to boost up the voltage ,and that voltage also can be saved in the battery for further use .This method can be employed in lots of day today places like railway station, shopping complex where lots of people crowd together ,This method has only investment and very reliable too.

Key words: Power Harvesting, Regenerative Energy Sources

I. INTRODUCTION

Footpath is that the commonest place wherever electricity material is enforced to get bit of energy attributable to motion of the folks. some similar places area unit looking malls, flooring, subway etc. If one contemplate the common energy generated per hour then it's potential to use that energy for powering the low power electronic devices like show screens. Recent experiments area unit dole out in Israel; accommodates putt PEG 6cm below the road level and at a distance of 30cm apart. From these trials, it's been determined that a vehicle consideration at around five tons will generate 2000V, and a 1Km cluster of such generator will generate 400Kwh energy. If 600 such vehicles area unit allowed to travel through the road for associate hour. it will power up to 600-800 homes. most quantity of pressure is exerted on runways once the craft takes to the air or lands. This vast quantity of energy is reborn by putting the clusters of electricity materials at sure places below the runway. This additionally helps to boost the potency by employing a stacked structure. Stacked structure is consists of the many layers of electricity materials and area unit capable of handling the huge pressure. the most takeoff weight for the airliner craft (A380) is 560 tones, which may generate 224 KV, thus if one considers the whole variety of landings and take offs per hour then generates vast quantity of power. roughly 8138 kWh energy can be made which may power up to 12207-16276 homes. The railroad tracks area unit the necessary place that is liable for generation {of vast|of giant|of big} energy because the huge amount of pressure is exerted by trains on the railroad tracks. Here the pads of electricity materials area unit placed at juncture wherever wheel makes the contact with tracks and it receives most pressure like employed in field runways, the pads area unit organized in such order that an oversized force is tolerated and larger quantity of charge is stored. They are more and more embedded in complex devices and high tech systems that make whole economies exist and function in an efficient way. Piezoelectric materials are among these 'invisible' materials that are widespread around us, although they are unknown to the public at large. Mobile phones, automotive electronics, medical technology, and industrial systems are only a few areas where piezoelectric components are indispensable. Echoes to capture the image of an unborn baby in a womb make use of piezoelectricity. Even in a parking sensor at the back of our car, piezoelectric material is present.

II. EXISTING SYSTEM

The objective of this work is power generation through footsteps as a source of renewable energy that we are able to obtained whereas walking on to the bound arrangements like footpaths, stairs, plate forms and these systems are often install elsewhere specially within the dense inhabited areas. the fundamental operating principle of 'footstep power generation system' relies on the crank shaft and kit arrangement and fly wheel. So in order to implement this foot step power generation system we tend to change the wood plates higher than and below the sensors and transferable springs, once we walk on the mat than mechanically force is applied and as a result magnet fixed below the highest wood sheet and moves into the cavity. As this cavity is mounted inside wood sheet of mat thus between the transferable springs adjusted between the highest and bottom sheets. therefore as a result we've all over that these kinds of styles and techniques of power generating systems ar terribly helpful and handy so as to match the availability and demand of energy globally further. The complete diagram of the foot step power generation is given below. only 1 step is inclined in bound tiny angle that is employed to generate the ability. The pushing power is born-again into power by correct driving arrangement. The rack & Opinion, spring arrangement is mounted at the inclined step. The spring is employed to come the inclined step in same position by emotional the load. The opinion shaft is connected to the supporter by finish bearings as shown in fig. The larger sprocket conjointly coupled with the pinion shaft, in order that it's running the same speed of pinion. The larger sprocket is coupled to the little cycle sprocket with the assistance of chain (cycle). This larger sprocket is employed to transfer the rotation force to the smaller sprocket. The smaller sprocket is running same direction for the forward and reverse direction of motility movement of the larger sprocket. This action locks sort of a cycle pedaling action. The fly wheel and kit wheel is additionally coupled to the smaller sprocket shaft. The regulator is used to increase the rev of the smaller sprocket shaft. The cogwheel is coupled to the generator shaft with the help of another cogwheel. The generator is employed here, is static magnet D.C generator. The generated voltage is 12Volt D.C. This D.C voltage is stored to the Lead-acid twelve V

battery. The battery is connected to the electrical converter. This electrical converter is employed to convert the twelve V D.C to the 230 V A.C.

III. PROPOSED SYSTEM

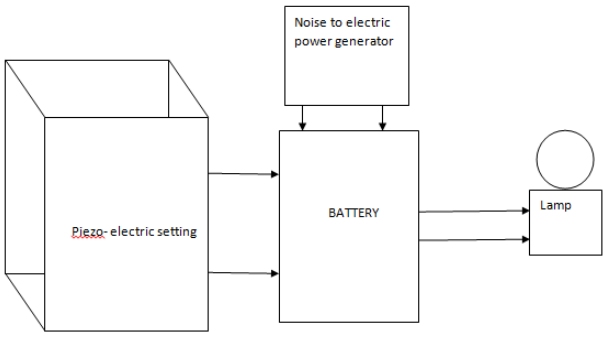

Fig. 1: Block Diagram

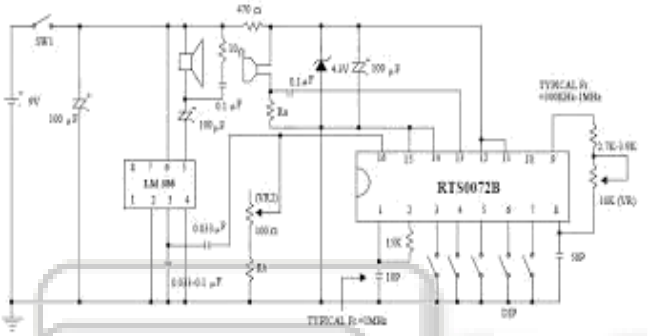

Fig. 2: Noise to Power Generator

The working is based on the concept of capturing the unused energy surrounding any system and converting it into electrical energy that can be used to extend the lifetime of that system by providing energy through backup. The piezoelectric plates will be placed under the non-conducting material (hard rubber) and the pressure created by the pressure such as footsteps (in PZR) and waterfall pressure (in PZW) will produce energy which can be stored and utilized as mentioned. The figure (Fig 1) illustrates the piezoelectric arrangement. The piezoelectric elements are in their various forms and configurations are designed to operate near resonance. Resonance may vary as a function of number of properties of Piezo materials being employed.

These may include the size, shape, density and other physical parameters of a particular configuration for elements being used. Electrical contacts or coupling elements used in the figure are coupled to suitable electrical leads, which are electrically coupled to the piezoelectric element. The polarity of charge depends upon whether element is under compression or tension as a result of applied force. If the element is subjected to an applied compressive force its polarity will be positive and due to applied tensile force it will be negative. This element generates the electrical charge to the voltage limiter. Voltage limiter is the back to back zener diodes. It provides the return channel through which electric charge may flow to the piezo unit to prevent the depolarization of the piezo element.

The return channel is provided to work in either polarity mode. Voltage limited electrical charge is coupled electrically to bridge rectifier. This pulsating DC from rectifier is coupled to the capacitor filter which efficiently serves as ripple filter. This rippled free DC obtained from filter is provided to shunt type voltage regulator, to regulate voltage which advantageously coupled to storage element which can be a battery or a capacitor. This is embodiment of single piezo electric unit. For large scale production, multiunit piezo electric Array is utilized by plurality of elements. More preferable stack Array arrangement passes the applied force through all layers forming piezoelectric elements in the Array thus causing the voltage to rise. The Array consists of the given type of subsystem embodiments which are eclectically coupled at nodes so as to form a voltage additive series circuit arrangement. The summed electrical charge is input to the regulator by the way of nodes. This output is stored in one or more electrical charge element. Finally the generated, regulated, conditioned and stored electrical charge of the system is available for use by external circuitry. The conditioning circuitry is preferably of relatively low impedance to more efficiently capture the generated charge.

IV. ADVANTAGES OF THE PROPOSED SYSTEM

1) In this paper we introduce a noise circuit. On using the noise circuit, we can get more power than the normal output power.
2) When there are high decibels of noise the output power will be increased much.
3) Power generation is simply walking on the step
4) Power also generated by running or exercising on the step
5) No need fuel input
6) This is a Non-conventional system Battery is used to store the generated power

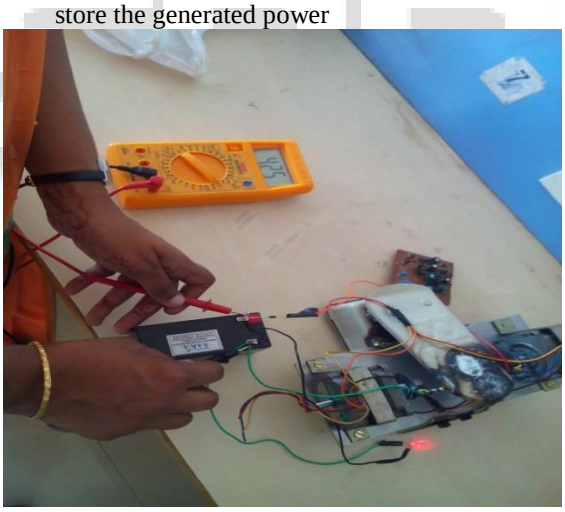

Fig. 3: Snapshot

V. APPLICATIONS

We can use these techniques in crowded places like Bus stands, railway stations, shopping malls, airports, colleges, schools, cinema theatres etc.

VI. CONCLUSION

“Energy will neither be created nor be destroyed It may be transferred from one kind to another” it's one of the similar approach to come up with the energy victimisation electricity principle. it's cheap and straightforward to install. This method of generating electricity by the use of piezoelectric material has already being started in many countries viz Japan, Israel, Netherlands. Use of piezo-electric material is

eco-friendly causes no pollution. It is an inexpensive way of generating electricity and is easy to install. This technology would facilitate the longer term creation of recent urban landscapes, athletic fields with a spectator space, music halls, theaters, nightclubs and a large gathering area for rallies, demonstrations and celebrations, railway stations, bus stands, subways, airports etc. like capable of harnessing human locomotion for electricity generation.

REFERENCES

[1] Richard, Michael Graham, (2006-08-04). "Japan: Producing Electricity from Train Station Ticket Gates". Tree Hugger. Discovery Communications, LLC.
[2] IEEE Standard on Piezoelectricity, Standards Committee of the IEEE Ultrasonic's, Ferroelectrics, and Frequency Control Society, ANSI/IEEE Std 176-1987 (1988).
[3] Becker, Robert O; Marino, Andrew A, (1982). "Chapter 4: Electrical Properties of Biological Tissue (Piezoelectricity)". Electromagnetism & Life. Albany, New York: State University of New York Press. ISBN 0-87395-560-9.
[4] Anil Kumar, International Journal of Scientific & Engineering Research Volume 2, Issue 5, May-2011 ISSN 2229-5518.
[5] Andrew Townley, Electrical Engineering, University of Pennsylvania.
[6] Jedol Dayou, School of Science and Technology, University Malaysia Sabah, 88999 Kota Kinabalu, Sabah, Malaysia.
[7] Man-Sang, Faculty of Science, Art and Heritage, University Tun Hussein Onn Malaysia, 86400 Parit Raja, Batu Pahat, Johor, Malaysia.
[8] ANSI-IEEE 176 (1987) Standard on Piezoelectricity.
[9] S.Trolier-McKinstry,(2008)."Chapter3: Crystal Chemistry of Piezoelectric Materials". In A. Safari, E.K. Akdo˘gan. Piezoelectric and Acoustic Materials for Transducer Applications. New York: Springer. ISBN 9780387765389.

