Finite Element Analysis of Gearbox Housing

Bhavin Gajjar
M.E. (CAD/CAM), Mechanical Engineering Department,
A. D. Patel Institute of Technology, New V.V.Nagar, Gujarat, India - 388121

Abstract--- Gearbox is an important component of heavy machinery. The gearbox housing plays a vital role as it houses the transmission components. The different components housed are gears, bearings, shafts and oil. The housing contributes largely towards the total weight of the gearbox and hence requires careful design procedure. A variety of forces will be acting on gearbox housing which must be handled critically while designing the gearbox housing.

Stress analysis is engineering discipline that determines the stress in materials and structures subjected to static and dynamic forces or loads. FEA method is used to analyse static properties of the case and transmission parts in high-speed class. The consideration of the effects on gearbox in the action of structural load, gearbox stress distribution can be satisfied for working condition by using ANSYS.

I. INTRODUCTION

Force analysis for helical gears can be made in similar manner as in the case of spur gears but because of the helix angle, an additional force component is produced. This appears as an axial force with the resulting axial thrust on the bearings. Types of forces generated on helical gear tooth [1]:

- Tangential force (F_t)
- Axial force (F_a)
- Radial force (F_r)

In cases where the end thrust of a helical gear set is objectionable for any particular reason or this axial force creates problems for the bearings, a double-helical or herringbone gear set is used. Such a gear is in effect a combination of two similar helical gears, having the same amount of helix angle but of opposite hands, placed side by side, cut on the same gear blank and mounted on the same shaft [1].

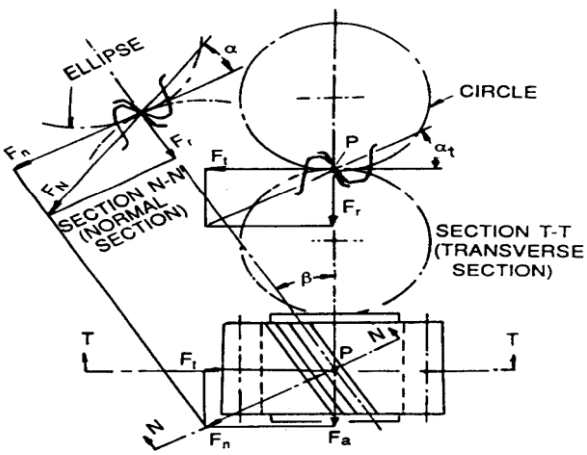

Fig. 1: Helical gear tooth forces [1]

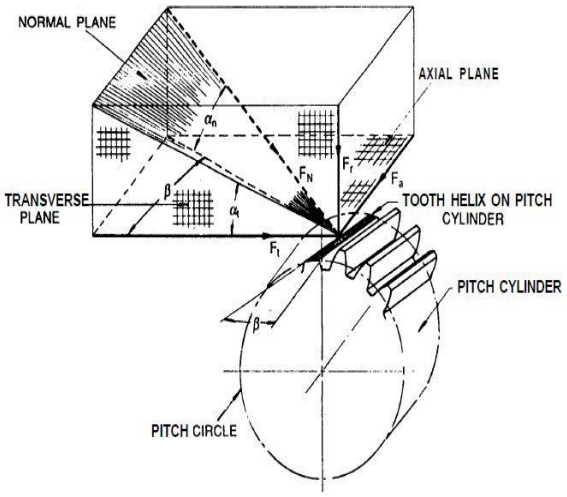

Fig. 2: Pictorial view of helical gear tooth forces [1]

When a pair of parallel helical gears mesh, the following conditions must be satisfied for proper running of the set:

- The gears must have helix angles of equal value;
- The gear teeth of each member must have the same module, and
- The gear teeth of each member must have opposite helices, that is, one gear must have right-handed helical teeth while the other must have left-handed ones [1].

II. LITERATURE REVIEW

A. M. Davis et al. [2]: analysed designing for static and dynamic loading of a gear reducer housing with FEA. A recent trend has been a movement to more user-friendly products in the mechanical power transmission industry. A good example of such a product is a high-horsepower, right angle, shaft-mounted drive designed to minimize installation efforts. Commonly referred to as an alignment-free type, it allows the drive package mounting to be quicker, more cost effective and require less expertise during installation. This facilitates the use of the drive in applications such as underground mining, where there is little room to maneuver parts. The most common application for the alignment-free style drive is for powering bulk material handling belt conveyors.

An alignment-free drive is direct-coupled to the driven shaft only; it is not firmly attached to a foundation or rigid structure. A connecting link or torque arm connects the drive to a fixed structure, which limits the drive's rotational movement about the driven shaft. The electric motor is supported by the reducer housing through a fabricated, steel motor adapter; the coupling connecting the motor shaft and reducer shaft is enclosed by this motor adapter.

Sumitomo Drive Technologies is working on a design of the alignment-free system by using finite element analysis (FEA) to help guide the design process. FEA was used to

test the cast iron housing to determine any potential problem areas before production begins. Once analyses were completed, the motor adapter was redesigned to lower stresses using the information from the FEA and comparing it to field test data.

1) *FEA of Gear Reducer Housing:* FEA modelling in order to simulate the system effectively, the entire system was analysed as an assembly. Based on an existing and operating prototype design, the solid model was converted to a step file (.stp) and imported into PTC Pro/Mechanica. The FEA model was meshed in Pro/Mechanica using p-type elements, and a simple linear analysis was performed. Bolts were modelled using Pro/Mechanica's fastener application. The entire assembly mesh is shown in Figure 3. The FEA model had a maximum of 133,812 elements.

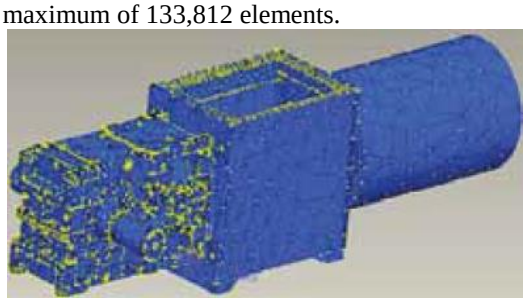

Fig. 3: FEA model mesh [2]

2) *Static Analysis:* The reducer housing is connected to the rest of the assembly by four bolts at the high-speed, end-face of the housing.

The free-body diagram of the entire drive system is given in Figure 4.

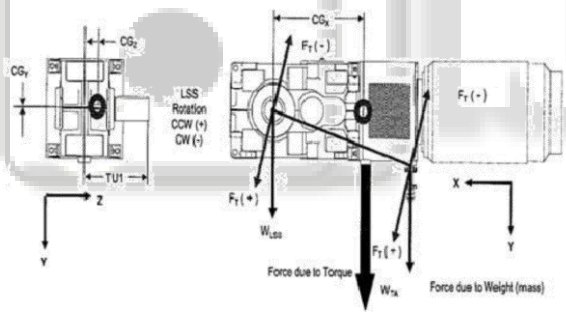

Figure. 1: Free-body diagram [2]

Figure 5 shows the stress distribution around the boltholes of the reducer interface.

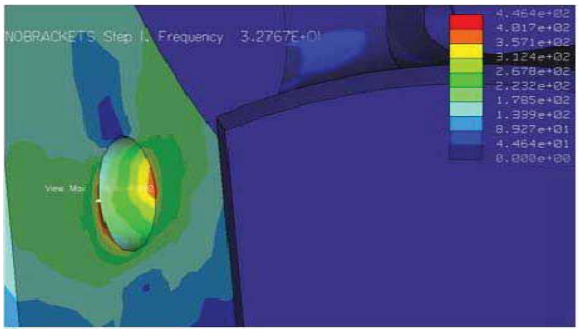

Figure. 2: Stress distribution on reducer interface [2]

B. P. D. Patel & D. S. Shah [3]: presented Steady state thermal stress analysis of gearbox casing by finite element method. This paper contains the gearbox casing analysis by finite element method (FEM). In this paper, thermal stresses have been analysed on gearbox casing, and thus temperature field has been coupled to the 3-Dimensional structure model using FEM. Paper also describes convection effect between the inner-surface of casing and the circulating oil which has been found small and thus neglected. Study of equivalent von-misses stresses in inner and outer gearbox casing with the coupled method has been done using ANSYS software. Result shows thermal stress analysis and deformation value under the action of force and heat. The main objectives of the work to impotence have to show in below.

- To carry out thermal stress analysis using ANSYS software for analysing thermal load and temperature effect in the gearbox casing.
- In future for optimization and design modification of gearbox casing for better output performance.
- Reverse engineering is also possible in design of gearbox casing.

1) *Model preparations for analysis:*

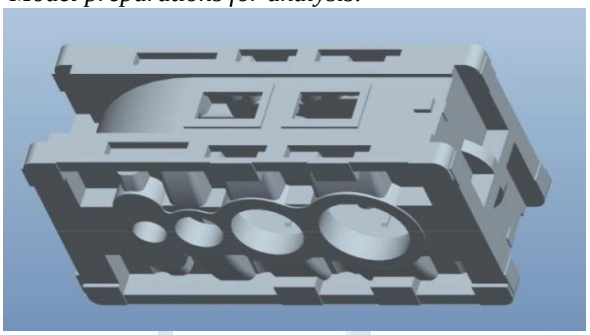

Fig. 6: 3-Dimesional assembly modelling of gear case in Pro-E [3]

2) *Mesh strategy:*

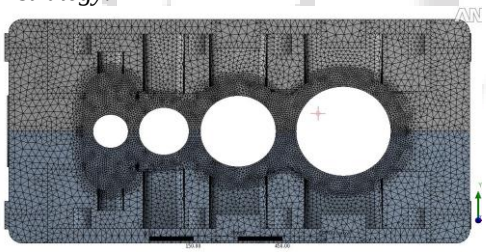

Fig. 7: FEA model of gearbox casing [3]

3) *Boundary condition and applied load:*

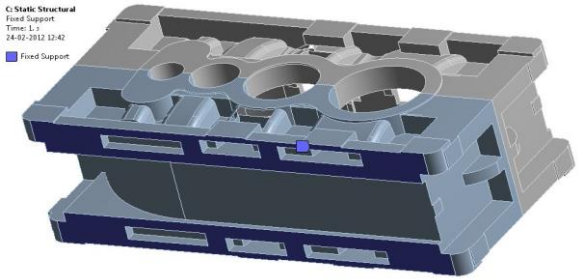

Fig. 8: Fixed support of bottom in gearbox casing [3]

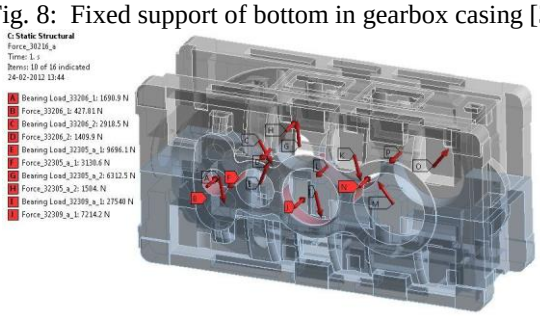

Fig. 9: Loads in gearbox casing [3]

C. M. Sofian Et Al. [4]: Described the study about vibration analysis for gearbox casing using Finite Element Analysis (FEA).

The aim of this paper is to apply ANSYS software to determine the natural vibration modes and forced harmonic frequency response for gearbox casing.

The important elements in vibration analysis are the modeling of the bolted connections between the upper and lower casing and the modeling of the fixture to the support. This analysis is to find the natural frequency and harmonic frequency response of gearbox casing in order to prevent resonance for gearbox casing. From the result, this analysis can show the range of the frequency that is suitable for gearbox casing which can prevent maximum amplitude**.**

D. Shrenik M. Patil & Prof. S. M. Pise [5]: Summarized modal and stress analysis of differential gearbox casing with optimization. The process of casting design in the automotive industry has been significantly refined over the years through the capabilities of advanced computer aided design and engineering tools. One of the significant benefits of these computer aided capabilities is the direct access to CAD geometry data, from which finite element models can be quickly developed. Complex structures can be meshed and analyzed over a relatively short period of time. The application of advanced finite element analyses such as structural modification and optimization are often used to reduce component complexity, weight and subsequently cost. Because the level of model complexity can be high, the opportunity for error can also be high. For this reason, some form of model verification is needed before design decisions made in the FEA environment can implemented in production with high confidence. Dynamic correlation, comparison of mode shapes and natural frequencies, is a robust tool for evaluating the accuracy of a finite element model. The objective of the project is to analyze differential gearbox casing of pick up van vehicle for modal and stress analysis. The theoretical modal analysis needs to be validated with experimental results from Fourier frequency transformer analysis.

The main motivation behind the work is to go for a complete FEA of casing rather than empirical formulae and iterative procedures.

III. CONCLUSION

By reviewing this paper it clearly shows that the force analysis and forces generated in gerbox housing can be plays a vital role while designing gearbox housing so it's very important to understand during designing of it.

Also FEA method used to analyse static properties of the case and transmission parts in high-speed class. The consideration of the effects on gearbox in the action of structural load, gearbox stress distribution can be satisfied for working condition by using ANSYS.

REFERENCES

[1] Handbook of gear design by Gitin M Maitra
[2] M. Davis, Y. S. Mohammed, A. A. Elmustafa, P. F. Martin and C. Ritinski; "Designing for static and dynamic loading of a gear reducer housing with FEA", (February 2010)
[3] P. D. Patel & D. S. Shah; "Steady state thermal stress analysis of gearbox casing by finite element method", International Journal of Mechanical and Industrial Engineering (IJMIE) ISSN No. 2231 –6477, Vol-2, Iss-4, 2012
[4] M. Sofian, K. Saifullah, M. Tasyrif, K. Salleh, I. Ishak; "A study of Vibration Analysis for Gearbox Casing Using Finite Element Analysis", Proceedings of International Conference on Applications and Design in Mechanical Engineering (ICADME), 11 – 13 October 2009, Batu Ferringhi, Penang, MALAYSIA
[5] Shrenik M. Patil & Prof. S. M. Pise; "Modal and Stress Analysis of Differential Gearbox Casing with Optimization", Shrenik M. Patil et al Int. Journal of Engineering Research and Applications, ISSN: 2248-9622, Vol. 3, Issue 6, Nov-Dec 2013, pp.188-193

