Theoretical study of metal clad optical waveguide polarizer

Ghanshyam Kumar Singh[1]
[1]Department of Electronics and Communication Engineering
[1]School of Engineering & Technology, Sharda University, Greater Noida, (UP)

Abstract— In this paper, the metal clad optical waveguide polarizer have been analysed and presented. The metal's that were used are Gallium Arsenide and Aluminium for the cladding purpose of comparison and analysis. It was found that the variation between TE mode and TM mode when Gallium Arsenide is used as the cladding is less as compared to Aluminium. This is due to the metal cladding itself will cause a cut-off region in the polarizer. Gallium arsenide may have fewer modes compared to aluminium and which resulted in the variation of the graphs between the two metals used. We have also shown that there is a slight drop of the TM to TE loss ratio when the buffer layer thickness is increased. It was also found that the high extinction ratio results in the high and linear attenuation in the fiber.
Keywords: Optical waveguide, Polarizer, Fiber

I. INTRODUCTION

Polarizer's and polarization devices are important components in fiber optic communication and for integrated optics circuits. There is a growing need for efficient low loss components that are compatible with optical fibers. The use of integrated optics offers an attractive solution, but there is considerable loss in removing the signal from the single mode fiber.[1-2] Fiber–optic polarizer's are integral components in optical communications systems and polarization dependent sensors. One method of constructing fiber polarizer is from bulk optics. Another approach that is simpler and has less loss is an all fiber device, such as a side polished fiber fabricated to have polarizing properties. A side-polished fiber is an optical fiber device that has a portion of the cladding polished away and replaced with a thin film overlay. This overlay acts as a multimode slab waveguide that can couple to the optical fiber and allows light at certain resonant wavelengths to be removed from the fiber [3-9]. The light in the fiber interacts with the TE and TM modes of the overlay at different wavelengths and hence the side-polished fiber can be used as a polarizer. This device reduces losses and is simpler to package as the fiber is continuous. Fiber-optic polarizer's can be constructed by removing a portion of the fiber cladding and replacing it either with a birefringent crystal or metal. A fiber polarizer with partial metal cladding is preferred for its stable polarization because studies has shown that it has a high insertion loss for a given extinction ratio. The equivalent current theory of waveguide coupling has also been applied to a fiber polarizer which is formed by partially polishing out the cladding on one side of a single-mode fiber and evaporating a metal on the polished surface[10-20].

In this work we have investigated the attenuation characteristics of metal clad optical waveguide which is suitable for mode filtering. To achieve this, we have analysed the metal clad film waveguide and the single mode fiber type polarizer by the equivalent theory of optical waveguide coupling. We have also analysed the new and analytic formulas of attenuation calculations for TE and TM waves. We have shown that the different variations of attenuation coefficients, versus the thickness of core for different buffer layer changes in an exponential manner. The high extinction ratio results in the high and linear attenuation in the fiber is also shown.

II. ATTENUATION COEFFICIENT FOR FILM WAVEGUIDE

To analyze waveguide polarizer the eigenvalue equation for four- layer film can be written like

$$wK_1 = m\pi + \tan^{-1}\left(\gamma_{12}\frac{K_2}{-jK_1}\right) + \tan^{-1}\left\{\gamma_{13}\frac{K_3}{K_1}\tan\left[\tan^{-1}\left(\gamma_{34}\frac{K_4}{-jK_3}\right) - K_3 h\right]\right\} - (1)$$

Where,

$$k_i^2 = n_i^2 k_o^2 - \tilde{\beta}^2, i = 1,2,3,4$$

$$\gamma_{pq} = \begin{cases} 1 \\ \left(\frac{n_p}{n_q}\right)^2 \end{cases}$$

$$k_{ix}'^2 = -k_{ix}^2$$

$$k_o = 2\pi / \lambda$$

The eigenvalue of each mode can be obtained by the numerical analysis of the above complex transcendental equation. This exact solution is used to assess the validity of our theory. After a series of calculations and analysis of the attenuation characteristics of the TM mode for a metal clad film waveguide, it is found that the effect of the surface plasma wave is small when the buffer layer thickness is not small enough. So, from here we can get the attenuation coefficient of the TM for the metal clad film waveguide similarly as we do for the TE mode. The outline of the derivation of this formula is given here. A new formula for the attenuation coefficient is obtained from the fundamental idea of the equivalent current theory of optical waveguide coupling:

$$\alpha = \mathrm{Im}\left[\frac{\omega\varepsilon_0}{2}\iint_s \left(n_3^2 - n_4^2\right)\vec{E}\cdot\vec{E}_1^{-}\,ds\right] ----(2)$$

From the given equation, is the normal field solution of the metal clad film waveguide and is the normal mode solution when metal is not present. The minus represents the negative direction propagation. For the equation given above, the surface integral is evaluated only in the metal region. To obtain the attenuation coefficient expression, should be determined in equation (2) first. An approximate expression of is used.

For a TM wave, the field can be expressed as

$$H_{1y} = \begin{cases} H_o \cos(k_{1x} - \varphi_0), 0 \le x \le w, & (Eq:3a) \\ H_0 \cos\varphi_0 \exp(k'_{2x} x), x \le 0, & (Eq:3b) \\ H_0 \cos(k_{1x} w - \varphi_0) \exp[-k'_{3x}(x-w)] where, x \ge w, & (Eq:3c) \end{cases}$$

The field depends on z as exp (-jβ1z) and H0 is a normalization parameter, is the propagation constant, is the initial phase angle

$$k^2{}_{ix} = n_i{}^2 k_o{}^2 - \beta_1$$

$$k'^{\,2}_{ix} = -k^2{}_{ix} \quad \text{i} = 1,2,3,4.$$

The components of the electric field vector, are determined by

$$E_{1x} = \frac{\beta_1}{\omega\varepsilon} H_{1y}, \text{ ----------} (Eq:4a)$$

$$E_{1z} = \frac{-j}{\omega\varepsilon} \cdot \partial H_{1y} / \partial x, \text{---------} (Eq:4b)$$

From equation (2), we can get the exact value if is the true normal mode solution of the metal clad film waveguide, but it is difficult to get this solution. We can assume that the field inside the metal is the transmitted wave when the field equation (4) is incident upon the metal boundary. A reflected wave is introduced for the purpose of field matching at the same metal boundary at the same time. However, this reflected wave is much smaller compared to the incident wave at the waveguide boundary (x=w), so it can be neglected at x=w. Hence, our field solution not only satisfies the metal boundary condition, but also approximately satisfies the waveguide boundary condition at x=w. Hence, we get the

$\vec{E}$ expression as

$$E_x = \frac{\beta_1}{\omega\varepsilon_0 n^2{}_4} H_y, (Eq:5a)$$

$$E_z = -\frac{k_{4x}}{\omega\varepsilon_0 n_4{}^2} H_y, (Eq:5b)$$

$$H_y = T_m H_0 \cos(k_{1x} - \varphi_0) \cdot \exp[-k'_{3x} h - jk_{4x}(x - w - h)], (Eq:5c)$$

where,

$$T_m = \frac{2k'_{3x}}{k'_{3x} + j\left(\frac{n_3}{n_4}\right)^2 k_{4x}}$$

Substituting $\vec{E}$ of (5) and $\vec{E}_1$ of (4) into (2), the attenuation coefficient for the TM wave

$$\alpha_{TM} = \frac{2k_{1x}^2}{w_e \beta_1} \frac{\exp\left(-2k'_{3x} h\right)}{k_{1x}^2 + \left(\frac{n_1}{n_3}\right)^4 k'^{\,2}_{3x}} \cdot \mathrm{Im}\left[\frac{n_3^2 - n_4^2}{n_3^2 n_4^2} \frac{\beta_1^2 + jk'_{3x} k_{4x}}{k'_{3x} + jk_{4x}} T_m\right], (Eq:6)$$

$$where T_m = \frac{2k'_{3x}}{k'_{3x} + j\left(\frac{n_3}{n_4}\right)^4 k_{4x}}$$

$$W_e = \frac{w}{n_1^2} + \frac{1}{n_2^2 k'_{2x}} + \frac{k_{1x}^2 + k'^{\,2}_{2x}}{k_{1x}^2 + \left(\frac{n_1}{n_2}\right)^4 k'^{\,2}_{2x}} + \frac{1}{n_3^2 k'_{3x}} \frac{k_{1x}^2 + k'^{\,2}_{3x}}{k_{1x}^2 + \left(\frac{n_1}{n_3}\right)^4 k'^{\,2}_{3x}}$$

For comparison purposes, the results for the TE mode are also listed in the following:

$$\alpha_{TE} = \frac{k_0^2 k_{1x}^2 k'_{2x} \exp\left(-2k'_{3x} h\right)}{\beta_1 \left(wk'_{2x} k'_{3x} + k'_{2x} + k'_{3x}\right)\left(k^2{}_{1x} + k'^2{}_{3x}\right)} \cdot \mathrm{Im}\left[\left(n_3^2 - n_4^2\right) T_e^2\right], (Eq:7)$$

where,

$$T_e = \frac{2k'_{3x}}{k'_{3x} + jk_{4x}}$$

III. CALCULATION FOR EXTINCTION RATIO

Extinction ratio is the ratio of the power in the unexcited polarization mode to the power in the excited polarization mode at the output of a fiber. It is also a measure of the polarization holding ability of a fiber.

Fiber polarizer is formed by partially polishing out the cladding on 1 side of a single-mode fiber and evaporating a metal on the polished surface. In order to calculate the extinction ratio of the single-mode fiber-type polarizer, it is necessary to obtain the attenuation expression of *x*- and *y*-polarized modes. The Figure.1 explains this.

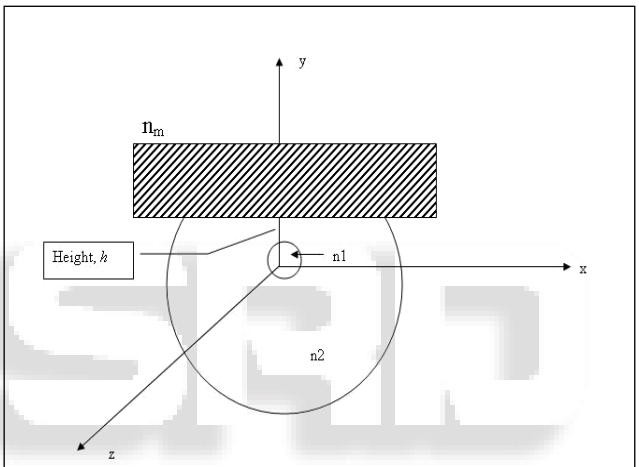

Structure of a fiber-type polarizer

Fig. 1: A Fiber-type polarizer

$$E_x = \begin{cases} -A_0 \frac{j\beta a}{u}\left[\frac{1-P}{2} J_0(u\rho) - \frac{1+P}{2} J_2(u\rho)\cos 2\theta\right], 0 \le \rho \le 1 \text{.....}(8.1) \\ -A_0 \frac{j\beta a}{w} \frac{J_1(u)}{K_1(w)}\left[\frac{1-P}{2} K_0(w\rho) + \frac{1+P}{2} K_2(w\rho)\cos 2\theta\right], \rho \ge 1 \text{.....}(8.2) \end{cases}$$

$$E_y = \begin{cases} A_0 \frac{j\beta a}{u} \frac{1+P}{2} J_2(u\rho)\sin 2\theta, 0 \le \rho \le 1 \text{.....}(8.3) \\ -A_0 \frac{j\beta a}{w} \frac{J_1(u)}{K_1(w)} \frac{1+P}{2} K_2(w\rho)\sin 2\theta, \rho \ge 1 \text{.....}(8.4) \end{cases}$$

$$E_z = \begin{cases} A_0 J_1(u\rho)\cos\theta, 0 \le \rho \le 1 \text{.....}(8.5) \\ A_0 \frac{J_1(u)}{K_1(w)} K_1(w\rho)\cos\theta, \rho \ge 1 \text{.....}(8.6) \end{cases}$$

For small differences in refractive index between the core and the cladding, P ≈-1 for HE modes and Ex>>Ez, thus the field can be rewritten as

$$E_x = \begin{cases} -A_0 \frac{j\beta a}{u} J_0(u\rho), 0 \le \rho \le 1 \text{.....}(8.7) \\ -A_0 \frac{j\beta a}{u} \frac{J_1(u)}{K_1(u)} K_0(w\rho), \rho \ge 1 \text{.....}(8.8) \end{cases}$$

$$E_y = 0$$

$$E_z = \begin{cases} A_0 J_1(u\rho)\cos\theta, 0 \le \rho \le 1 \text{.....}(8.9) \\ A_0 \frac{J_1(u)}{K_1(w)} K_1(w\rho)\cos\theta, \rho \ge 1 \text{.....}(8.10) \end{cases}$$

Where, $\rho = r / a$
a is the core radius
$u = a\,(n_1^2\, k_0^2 - \beta^2)^{1/2}$
$w = a\,(\beta^2 - n_2^2 k_0^2)^{1/2}$
n_1 is the core index
n_2 is the cladding index
A_0 is the field normalization parameter
J_0, J_1, J_2 are the Bessel functions
K_0, K_1, K_2 are the modified Bessel functions

$$P = \left(1/u^2 + 1/w^2\right)/\left(\eta_1 + \eta_2\right)$$

$$\eta_1 = J_1^{'}(u)/uJ_1(u)$$

$$\eta_2 = K_1^{'}(w)/wK_1(w)$$

Using approximate method, we have

$$\vec{E} = Etx = -A_0 \frac{j\beta a}{w} \frac{J_1(u)}{K_1(w)} T_x K_0(w^{'}\rho) \text{.....(8.11)}$$

where

$$T_x = \frac{K_0(l)I_1(l) + K_1(l)I_0(l)}{K_0(l^{'})I_1(l) + \frac{w'}{w}K_1(l')I_0(l)} \text{.....(8.12)}$$

where

$$l = w[1 + (h/a)]$$

$$l' = w'[1 + (h/a)]$$

Where I_0, I_1 are modified Bessel functions
Thus, attenuation coefficient for both x-polarized and y-polarized mode are given as follows:

$$\alpha_x = \mathrm{Im}\left[\frac{\omega\varepsilon_0}{2}\int_{a+h}^{+\infty}\int_0^{\pi}\left(n_2^2 - n_m^2\right)EtxExrdrd\theta\right] \text{.....(8.13)}$$

thus,

$$\alpha_x = \frac{k_0^2}{\beta a^2 w^2 D}\frac{J_1^2(u)}{K_1^2(w)}\mathrm{Im}\left[\left(n_2^2 - n_m^2\right)TxI\right]$$

where

$$D = \frac{1}{u^2}\left[J_1^2(u) + J_0^2(u)\right] + \frac{1}{w^2}\frac{J_1^2(u)}{K_1^2(w)}\cdot\left[K_1^2(w) - K_0^2(w)\right] \text{.....(8.14)}$$

$$I = \frac{a(a+h)}{w^2 - w'^2}\left[wK_0(l')K_1(l) - w'K_0(l)K_1(l')\right] \text{.....(8.15)}$$

$$\alpha_y = \frac{\beta}{a^2 w^2 D}\frac{J_1^2(u)}{K_1^2(w)}\mathrm{Im}\left[\frac{n_2^2 - n_m^2}{n_m^2}T_y I\right] \text{.....(8.16)}$$

where

$$T_y = \frac{K_0(l)I_1(l) + K_1(l)I_0(l)}{K_0(l')I_1(l) + \left(\frac{n_2}{n_m}\right)^2 \frac{w'}{w}K_1(l')I_0(l)} \text{.....(8.17)}$$

Extinction ratio (ER) is defined by

$$ER = 10\left(\alpha_x - \alpha_y\right)L/\ln 10(dB) \text{.....(8.18)}$$

Where, L is the polarizer length, n_1: effective index of core, n_2: effective index of cladding, n_m: effective index of metal cladding, h: height from center of the core to metal cladding

IV.RESULTS & DISCUSSIONS

The metal cladding (n_4) used is Gallium Arsenide which has a refractive index of 3.86 and an extinction coefficient of 0.2. The extinction coefficient is the imaginary part of the index of refraction. So, we can write it in complex form as $n_{4(\text{gallium arsenide})}$= 3.86-j0.2. Another metal cladding used here is Aluminum which has a refractive index of 1.2 and an extinction coefficient of 0.7. Similarly, this is written in complex form as $n_{4(\text{aluminum})}$ = 1.2-j0.7. The variations of the attenuation coefficient α_{TE} and α_{TM} with the thickness of core for different buffer layer thickness are shown in the Fig 2, 3, 4 & 5. It was found that where Gallium arsenide used as metal cladding the variation between TE mode and TM mode was less as compared to Aluminum as the metal cladding. This is due to the different modes in the fibers and the metal cladding itself. It will also cause a cutoff region in the polarizer. The analysis based on the model shows two kinds of cut off phenomena; those similar to parallel plate waveguide and those due to negative permittivity of the cladding. The choice of metal used for the cladding is affects the attenuation of the waveguide modes. We see the difference in the variation of the plots due to this reason. The difference between these two plots also shows that when the buffer layer thickness is increased, there is a slight drop of the TM to TE loss ratio. From this we may conclude that when there is the buffer layer thickness also plays a critical role to determine the attenuation properties of a fiber. The higher the buffer layer the less likely will be the difference of attenuation between the TE and TM modes. The dependence of the attenuation constants on buffer layer thickness and refractive index of thin film used have been studied and the results show that the attenuation constants of the well guided TE and TM modes in waveguides with large buffer layer thickness increases with buffer layer thickness and also mode order.

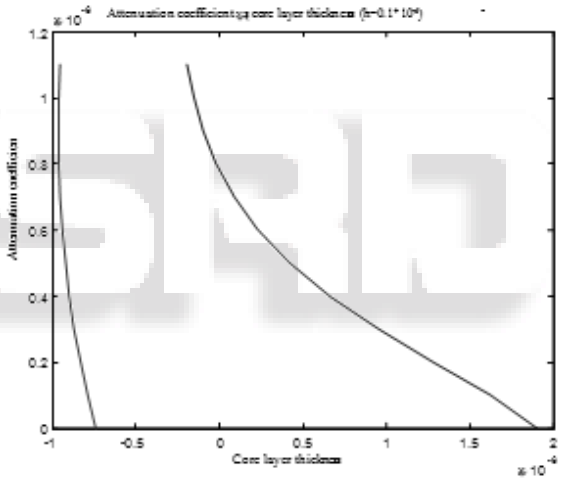

Fig. 2: Plot of attenuation constant vs. core layer thickness (w) for case h=0.1μ)

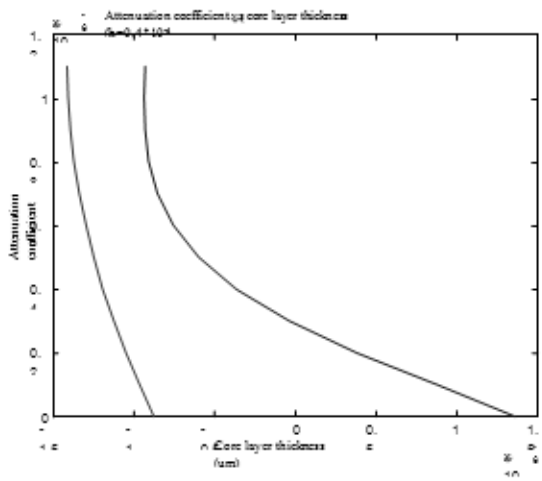

Fig. 3: Plot (α vs. core layer thickness (w) for case h=0.4μm)

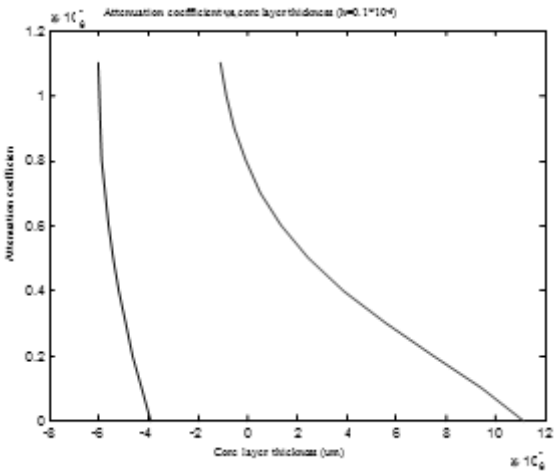

Fig. 4: Plot (α vs. core layer thickness (w) for case h=0.1μm)

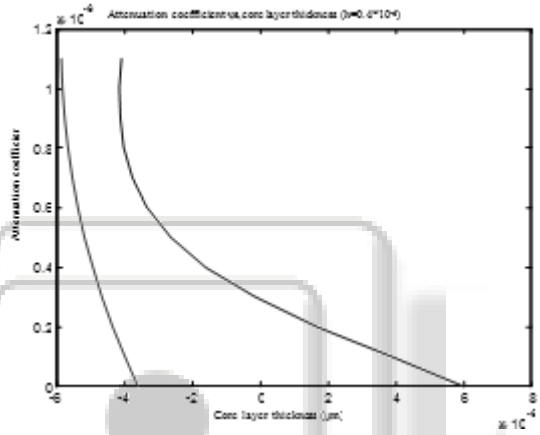

Fig. 5: Plot (α vs. core layer thickness (w) for case h=0.4μm)

IV. CONCLUSION

The attenuation coefficient varies between waveguides and is determined by a combination of the various loss mechanisms that occur in each waveguide. The lossier the waveguide is, the more decrement of the light intensity of the light occurs in the waveguide. The main waveguide losses are scattering, absorption and radiation. Scattering losses can be further divided into two types which are volume scattering and surface scattering. Losses in waveguide's can never be eliminated totally, but through proper design and usage of materials for the optical waveguide, losses can be reduced and therefore the performance of the optical waveguide polarizer can be maximized. It was also found that where Gallium arsenide used as metal cladding the variation between TE mode and TM mode was less as compared to Aluminum as the metal cladding. This is due to the different modes in the fibers and the metal cladding itself. It will also cause a cutoff region in the polarizer. We have shown that the high extinction ratio results in the high and linear attenuation in the fiber. All these results are new and very useful to the design and calculation of the metal clad optical waveguide polarizer. Furthermore, this analysis method can be easily applied to any form of a waveguide, so it is a method of important significance.

REFERENCES

[1] Guangyuan Li; Anshi Xu, "Analysis of the TE -Pass or TM -Pass Metal-Clad Polarizer With a Resonant Buffer Layer," *Lightwave Technology, Journal of*, vol.26, no.10, pp.1234,1241, May15, 2008
[2] Chan, F.Y.M.; Yasumoto, K., "Coupled-Mode Analysis of a Metal-Coated Planar Waveguide with a Corrugated Long-Period Grating," *Microwave Conference, 2008 China-Japan Joint*, vol., no., pp.566,570, 10-12 Sept. 2008
[3] FA Benson and TM Benson, Fields, waves and transmission lines, Chapman & Hall (1991)
[4] H Kogelnik, Theory of optical waveguides, in T Tamir (editor), Guided-wave optoelectronics, Springer-Verlag 2nd Edition (1990)
[5] DM Marcuse, Theory of dielectric optical waveguides, Wiley (1992)
[6] TM Benson, RJ Bozeat and PC Kendall, Rigorous effective index method for semiconductor rib waveguides, IEE Proc J, Vol. 139, No. 1 pp. 67-70 (1992)
[7] RJ Bozeat, Thin film optical waveguides on silicon, PhD Thesis, University of Nottingham (1993)
[8] R Baets, P Kaczmarski and P Vankwikelberge, Design and modeling of passive and active optical waveguide devices, in JH Marsh and RM De La Rue, Waveguide Optoelectronics, Kluwer Academic Publishers (1992)
[9] TM Benson, Integrated optical components produced in GaAs and InP epitaxial layers using the photo elastic effect, PhD Thesis, University of Sheffield (1982)
[10] MS Stern, Finite difference analysis of planar optical waveguides, in WP Huang (editor), Methods for modeling and simulation of guided-wave optoelectronic devices: modes and couplings PIER 10, EMW Publishing (1995)
[11] MS Stern, Semivectorial polarized finite difference method for optical waveguides with arbitrary index profiles, IEE Proceedings J – Optoelectronics, Vol 135, pp 56-63 (1988)
[12] KA Stroud, Engineering Mathematics, Macmillan 3rd Edition (1987)
[13] N Mohd Kassim, Optical waveguides in silicon materials, PhD Thesis, University of Nottingham (1991)
[14] Y Chung and N Dagli, An assessment of finite difference beam propagation method, IEEE Journal of Quantum Electronics, Vol. 26, No 8, pp 1335-1339 (1990)
[15] CL Xu and WP Huang, Finite-difference beam propagation for guided-wave optics, in WP Huang (editor), Methods for modeling and simulation of guided-wave optoelectronic devices: Waves and interactions PIER II, EMW Publishing (1995)
[16] HT Seet, FD-BPM and its application to the study of optical waveguide components, Third Year Project Dissertation, University of Nottingham (1996)
[17] GR Hadley, Transparent boundary condition for the beam propagation method, IEEE Journal of Quantum Electronics, Vol. 28, No. 1, pp. 363-370 (1992)

[18] PK Cheo, Fiber optics and optoelectronics, Prentice-Hall International, 2nd Edition (1990)
[19] RC Hewson-Browne, PC Kendall and DA Quinney, Roughness scattering into substrate radiation modes of rib waveguides, IEE Proc J, Vol. 136, pp 281-286 (1989)
[20] WC Borland, DE Zelmon, CJ Radens, JT Boyd and HE Jackson, Properties of four layer planar optical waveguides near cutoff, IEEE Journal of Quantum Electronics, Vol QE-23, No 7, pp 1172-1179 (1987)
[21] RG Hunsperger, Integrated Optics, Springer-Verlag 4th Edition (1995)
[22] RA Soref and JP Lorenzo, Single-crystal silicon: a new material for 1.3 and 1.6µm integrated optical components, Electronics Letters, Vol. 21, No 21, pp 953-954 (1985)
[23] DG Hall, The role of silicon in optoelectronics, Mat Res Soc. Symp. Proc., Vol 298, pp 367-378 (1993)
[24] A Splett and K Petermann, Low loss single-mode optical waveguides with large cross section in standard epitaxial silicon, IEEE Photonics Technology Letters, Vol. 6, No. 3, pp. 425-527 (1994)
[25] A. Reisinger, "Characteristics of optical guided modes is lossy waveguides," Appl.Opt..vol 12,pp 1015-1023, (1973)
[26] J.N Polky and G.L Mitchell, "Metal-clad planar dielectric waveguide for integrated optics," J Opt.Soc>Amer vol.64, pp 274-279, (1974)
[27] W. Yizun, "Equivalent current theory of optical waveguide coupling," J.Opt.Soc.America.A.Vol 4.no 10, pp 1902-1910, (1987)
[28] E. Snitzer, "Cylindrical dielectric waveguide modes," J.Opt.Soc.Amer.,Vol 51, pp 491-498,1961.
[29] T. Hosaka, .Onamoto and T. Edahiro, "Fabrication of single mode fiber type polarizer," Opt.Lett, vol.8.no.2, pp 124-126, 1983.

