SDH (Synchronous Digital Hierarchy) & Its Architecture

Akshay Vaishnav Palle[1]
[1]PRRM Engineering College, Hyderabad

Abstract— The SDH (Synchronous Digital Hierarchy) tell us about transferring large amount of data over an same optical fiber and this document gives us the information about the structure and architecture of SDH.

I. INTRODUCTION

With the introduction of PCM technology in 1960s, communications networks were gradually converted in to digital technology.

As bandwidth demand grew the technology called Plesiochronous Digital Hierarchy (PDH) was developed by ITU-T G.702.

The basic primary multiplexer 2.048Mb/s trunks were joined together by adding bits (bit stuffing) which synchronized the trunks at each level of the PDH.

2.048Mb/s was called E1 and the hierarchy is based on multiples of 4 E1s.

1. E2, 4 x E1 - 8Mb/s
2. E3, 4 x E2 - 34Mb/s
3. E4, 4 x E3 - 140Mb/s
4. E5, 4 x E4 - 565Mb/s

The E3 tributaries are faster than the E2 tributaries, E2 tributaries are faster than the E1 tributaries and so on.

The plesiochronous digital hierarchy (PDH) is a technology used in telecommunications networks to transport large quantities of data over digital transport equipment such as fiber optic and microwave radio systems. The term plesiochronous is derived from Greekplēsios, meaning near, and chronos, time, and refers to the fact that PDH networks run in a state where different parts of the network are nearly, but not quite perfectly, synchronized.

Management is very inflexible in PDH, so SDH was developed.

Synchronous Digital Hierarchy (SDH) originates from Synchronous Optical Network (SONET) in the US. It includes capabilities for bandwidth on demand and is also made up of multiples of E1.

Ex: STM-1 (155Mb/s) is 63 x E1

Both SDH and SONET emerged between 1988 and 1992.

SONET is a digital hierarchy interface conceived by Bellcore and defined by ANSI for use in North America.

The SDH standard was originally defined by the European Telecommunications Standards Institute (ETSI), and is formalized as International Telecommunication Union (ITU) standards G.707, G.783, G.784 and G.803. The SONET standard was defined by Telcordia and American National Standards Institute (ANSI) standard T1.105

Synchronous Optical Networking (SONET) and Synchronous Digital Hierarchy (SDH) are standardized protocols that transfer multiple digital bit streams over optical fiber using lasers or highly coherent light from light-emitting diodes (LEDs). At low transmission rates data can also be transferred via an electrical interface.

The method was developed to replace the Plesiochronous Digital Hierarchy(PDH) system for transporting large amounts of telephone calls and data traffic over the same fiber with SONET and SDH, which are essentially the same, were originally designed to transport circuit mode communications (e.g., DS1, DS3) from a variety of different sources, but they were primarily designed to support real-time, uncompressed, circuit-switched voice encoded in PCM format.

The primary difficulty in doing this prior to SONET/SDH was that the synchronization sources of these various circuits were different. This meant that each circuit was actually operating at a slightly different rate and with different phase. SONET/SDH allowed for the simultaneous transport of many different circuits of differing origin within a single framing protocol. SONET/SDH is not itself a communications protocol per se, but transport protocol out synchronization problems.

II. PROTOCOL OVERVIEW

SDH is (a) a network node interface (NNI) defined by CCITT/ITU–TS for worldwide use. The basic unit of transmission in SONET is at 51.84 Mbps

Inserting and dropping out traffic from different customers can only happen at the level at which the customer is receiving the traffic.

Fig. 1:

This means that if a 140Mb/s fibre is near a particular site and a new customer requires a 2Mb/s link, then a whole set of demultiplexers are required to do this

The SDH specifications define optical interfaces that allow transmission of lower-rate (e.g., PDH) signals at a common synchronous rate.

SDH multiplexing combines low-speed digital signals such as 2, 34, and 140 Mbit/s signals with required overhead to form a frame called Synchronous Transport Module at level one (STM-1).

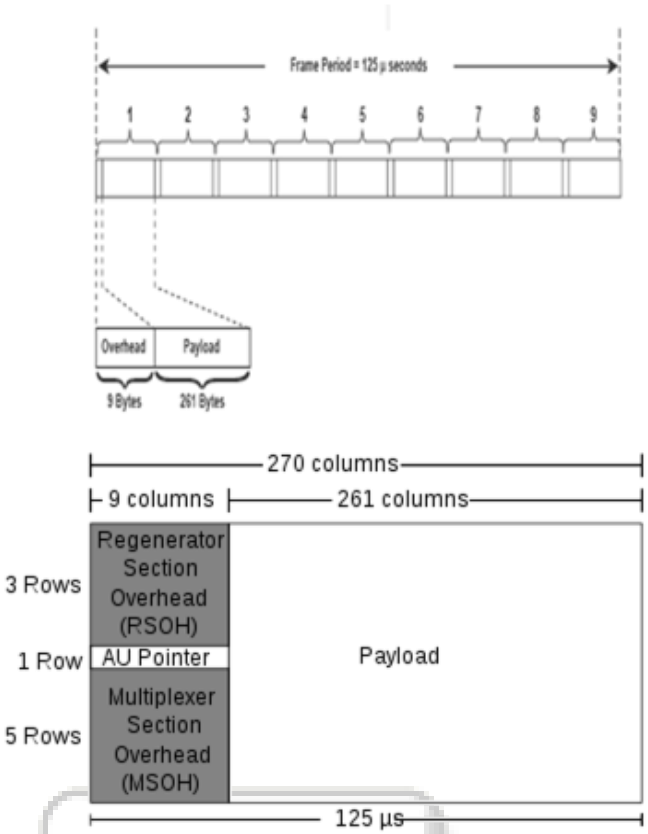

Fig. 2 STM-1 frame, which is created by 9 segments of 270 bytes each.

In order for SDH to easily integrate existing digital services into its hierarchy, it operates at the basic rate of 8 kHz, or 125 microseconds per frame, so the frame rate is 8,000 frames per second.

The frame capacity of a signal is the number of bits contained within a single frame.

Four transmission levels (STM-1, STM-4, and STM-16, STM-64) have been defined for the SDH hierarchy.

The basic frame rate remains 8,000 frames per second, but the capacity is quadrupled, resulting in a bit rate of 4 x 155.52 Mbit/s, or 622.08 Mbit/s.

Similarly STM-16 = 4X622.08 Mbps or 2.5 Gbps

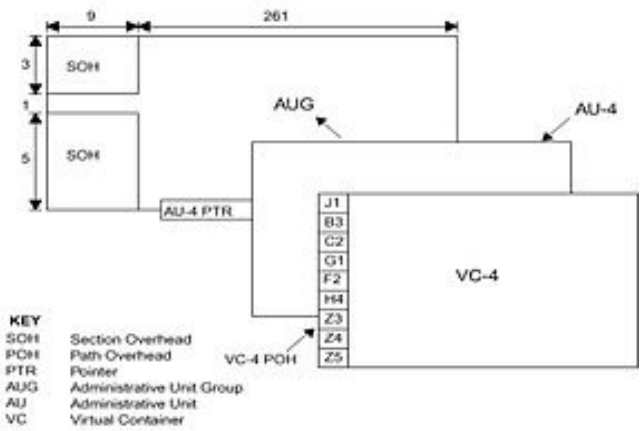

Fig. 3 STM-1 Frame structure

The STM – n signal is multiples of frames consisting of 9 rows with 270 bytes in each row.The order of transmission of information is first from left to right and then from top to bottom. The first 9 bytes in each row are for information and used by the SDH system itself. This area is divided into 3 parts

1. Regenerator Section Overhead(RSOH)
2. Multiplex Section Overhead(MSOH)
3. Pointers

The STM frame is continuous and is transmitted in a serial fashion: byte-by-byte, row-by-row

A. *Transport overhead*

The transport overhead is used for signalling and measuring transmission error rates, and is composed as follows:

B. *Section overhead*

Section overhead Called RSOH (regenerator section overhead) in SDH terminology, 27 octets containing information about the frame structure required by the terminal equipment.

C. *Line overhead*

Line overhead Called MSOH (multiplex section overhead) in SDH: 45 octets containing information about error correction and Automatic Protection Switching messages (e.g., alarms and maintenance messages) as may be required within the network.

D. *AU Pointer*

AU Pointer Points to the location of the J1 byte in the payload (the first byte in the virtual container).

E. *Path virtual envelope*

Data transmitted from end to end is referred to as path data. It is composed of two components:

F. *Payload overhead (POH)*

Nine octets used for end-to-end signalling and error measurement.

G. *Payload*

User data (774 bytes for STM-0/STS-1, or 2,340 octets for STM-1/STS-3c)

III. ELEMENTS OF SDH/SONET MULTIPLEX

A. *Container (C)*

Input signals are placed into the containers.

B. *Virtual Container (VC):*

It adds stuffing bytes for PDH signals, which compensates for the permitted frequency deviation between the SDH system and the PDH signal.

It adds overheads to a container or groups of tributary units that provides facilities for supervision and maintenance of the end to end paths. VCs carry information end to end between two path access points through the SDH system .VCs are designed for transport and switching sub-SDH payloads.

C. *Tributary Unit (TU):*

It adds pointers to the VCs. This pointer permits the SDH system to compensate for phase differences within the SDH network and also for the frequency deviations between the SDH networks.

TUs acts as a bridge between the lower order path layer and higher order path layer

D. Administrative Unit Group (AUG):

It defines a group of administrative units that are Multiplexed together to form higher order STM signal

E. Synchronous Transport Module - N (STM – N):

It adds section overhead (RSOH & MSOH) to a number of AUGs that adds facilities for supervision & maintenance of the multiplexer & regenerator sections. This is the signal that is transmitted on the SDH line
The digit "n" defines the order of the STM signal

IV. DATA TRANSMISSION RATES:

A number of transmission rates are defined/ possible

1. STS-1, STS-3, STS-9, STS-12, STS-18, STS-24, STS-36, STS-48, STS-192 , STS-768??
2. STM-1, STM-3, STM-4, STM-6, STM-8, STM-12, STM-16, STM-64, STM-256

Ethernet over SDH (EoS or EoSDH) or Ethernet over SONET refers to a set of protocols which allow Ethernet traffic to be carried over synchronous digital hierarchy networks in an efficient and flexible way. The same functions are available using SONET (a predominantly North American standard).
Ethernet frames which are to be sent on the SDH link are sent through an "encapsulation" block (typically Generic Framing Procedure or GFP) to create a synchronous stream of data from the asynchronous Ethernet packets. The synchronous stream of encapsulated data is then passed through a mapping block which typically uses virtual concatenation (VCAT) to route the stream of bits over one or more SDH paths. As this is byte interleaved, it provides a better level of security compared to other mechanisms for Ethernet transport.
After traversing SDH paths, the traffic is processed in the reverse fashion: virtual concatenation path processing to recreate the original synchronous byte stream, followed by decapsulation to converting the synchronous data stream to an asynchronous stream of Ethernet frames.
The SDH paths may be VC-4, VC-3, VC-12 or VC-11 paths. Up to 64 VC-11 or VC-12 paths can be concatenated together to form a single larger virtually concatenated group. Up to 256 VC-3 or VC-4 paths can be concatenated together to form a single larger virtually concatenated group. The paths within a group are referred to as "members". A virtually concatenated group is typically referred to by the notation VC-4, VC-3, VC-12 or VC-11 is the number of members in the group.

1. A 10-Mbit/s Ethernet link is often transported over a VC-12-5v which allows the full bandwidth to be carried for all packet sizes.
2. A 100-Mbit/s Ethernet link is often transported over a VC-3-2v which allows the full bandwidth to be carried when smaller packets are used (< 250 bytes) and Ethernet flow control restricts the rate of traffic for larger packets. But does only give ca. 97Mbit/s, not full 100Mb.
3. A 1000-Mbit/s (or 1 GigE) Ethernet link is often transported over a VC-3-21v or a VC-4-7v which allows the full bandwidth to be carried for all packets.

V. BANDWIDTH

Container (SDH)	C Container (SONET)	Type	Payload Capacity (Mbit/s)
VC-11-Xv	VT-1.5-Xv SPE	Low Order	X x1.600 (X = 1 to 64)
VC-12-Xv	VT-2-Xv SPE	Low Order	X x 2.176 (X = 1 to 64)
VC-3-Xv	-	Low Order	X x 48.384 (X = 1 to 256)
VC-3-Xv	STS-1-Xv SPE	High Order	X x 48.384 (X = 1 to 256)
VC-4-Xv	STS-3c-Xv SPE	High Order	X x 149.76 (X = 1 to 256)

Table 1: Bandwidth

Managing capacity in the network involves such operations as the following:
Protection, for circuit recovery in milliseconds

1. Restoration, for circuit recovery in seconds or minutes
2. Provisioning, for the allocation of capacity to preferred routes
3. Consolidation, or the funnelling of traffic from unfilled bearers onto fewer bearers in order to reduce waste of traffic capacity grooming,
4. The sorting of different traffic types from mixed payloads into separate destinations for each type of traffic

VI. FUNCTIONALITY AND APPLICATION:

Network management systems are used to configure and monitor SDH and SONET equipment either locally or remotely.
The systems consist of three essential parts, covered later in more detail:
Software running on a "network management system terminal", e.g. workstation, dumb terminal or laptop housed in an exchange/ central office.
Transport of network management data between the 'network management system terminal' and the SONET/ SDH equipment e.g. using TL1/ Q3 protocols.
Transport of network management data between SDH/ SONET equipment using "dedicated embedded data communication channels", (DCCs) within the section and line overhead.
The main functions of network management thereby include:

A. Network and network-element provisioning

In order to allocate bandwidth throughout a network, each network element must be configured. Although this can be done locally, through a craft interface, it is normally done through a network management system (sitting at a higher layer) that in turn operates through the SONET/SDH network management network.

B. Software upgrade

Network-element software upgrades are done mostly through the SONET/SDH management network in modern equipment.

C. Performance management

Network elements have a very large set of standards for performance management. The performance-management criteria allow not only monitoring the health of individual network elements, but isolating and identifying most network defects or outages. Higher-layer network monitoring and management software allows the proper filtering and troubleshooting of network-wide performance management, so that defects and outages can be quickly identified and resolved.

VII. TESTING OF SDH USING JDSU/FST

JDSU offers SONET/SDH test and troubleshooting solutions up to 40/43 G that verify network element conformance and connectivity and measure BERs to ensure QoS. JDSU testers can verify end-to-end connectivity, measure BER, and determine whether throughput, utilization, frame loss, packet jitter, wander, and round-trip delay (RTD) characteristics meet service level agreements.

The JDSU FST-2802, a member of the Test Pad family of products, is a rugged, battery-operated test instrument that enables field technicians to turn up and maintain Ethernet, IP, and Fibre Channel services. The testing capabilities of the FST-2802 range from bit error rate (BER) testing and verifying end-to-end connectivity to determining throughput, link usage, and round trip delay (RTD).

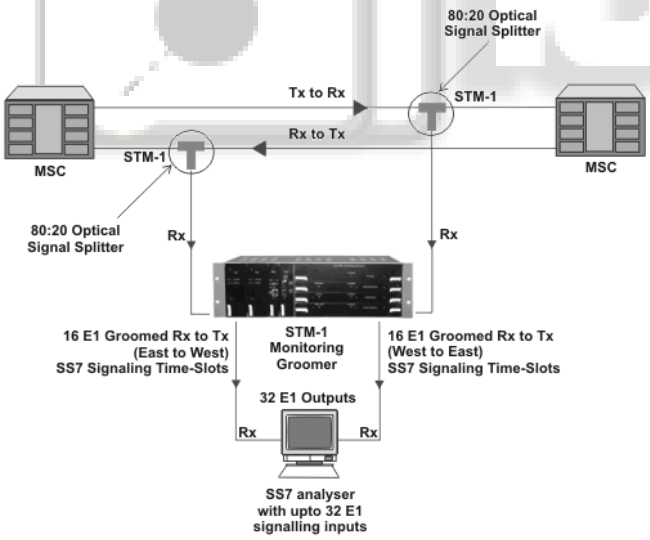

Fig. 3

Fig. 4

The instrument's ping and traceroute capabilities enable technicians to verify both the path and the connectivity of a link over an IP-routed network. Additionally, a new login feature for Fibre Channel enables technicians to test both full rate and sub rate links with BER patterns and test traffic. The easy-to-use graphical user interface (GUI) of the FST-2802 allows technicians, with limited Ethernet, IP, or Fibre Channel testing experience, to verify performance parameters and ensure that the services conform to service level agreements (SLAs).

Furthermore, optional automation of RFC 2544 testing is available with improved graphical results and reporting capabilities.

VIII. DWDM: DENSE WAVELENGTH DIVISION MULTIPLEXING

A. Definition

In digital signal processing, DWDM is a technique for increasing the bandwidth of optical network communications. DWDM allows dozens of different data signals to be transmitted simultaneously over a single fiber. To keep the signals distinct, DWDM manipulates wavelengths of light to keep each signal within its own narrow band.

DWDM is a more cost-effective alternative to Time Division Multiplexing (TDM). Electrical engineers often use a motorway analogy to explain the difference between the two. TDM relates to traffic flow on one lane of the motorway. To increase the throughput of autos, one can increase their speed that is equivalent to time multiplexing. DWDM, on the other hand, relates to the number of lanes on the motorway. Another way to increase auto throughput is to add more travel lanes that is equivalent to wavelength multiplexing.

Dense wavelength division multiplexing (DWDM) is a technology that puts data from different sources together on an optical fiber, with each signal carried at the same time on its own separate light wavelength. Using DWDM, up to 80 (and theoretically more) separate wavelengths or channels of data can be multiplexed into a light stream transmitted on a single optical fiber. Each channel carries a time division multiplexed (TDM) signal. In a system with each channel carrying 2.5 Gbps (billion bits per second), up to 200 billion bits can be delivered a second by the optical fiber. DWDM is also sometimes called wave division multiplexing (WDM).

In fiber-optic communications, wavelength-division multiplexing (WDM) is a technology which multiplexes a number of optical carrier signals onto a single optical fiber by using different wavelengths (i.e. colours) of laser light. This technique enables bidirectional communications over one strand of fiber, as well as multiplication of capacity.

DWDM works by combining and transmitting multiple signals simultaneously at different wavelengths on the same fiber. In effect, one fiber is transformed into multiple virtual fibres. So, if you were to multiplex eight OC -48 signals into one fiber, you would increase the carrying capacity of that fiber from 2.5 Gb/s to 20 Gb/s. Currently, because of DWDM, single fibres have been able to transmit data at speeds up to 400Gb/s.

A key advantage to DWDM is that it's protocol- and bit-

rate-independent. DWDM-based networks can transmit data in IP, ATM, SONET /SDH, and Ethernet, and handle bit rates between 100 Mb/s and 2.5 Gb/s. Therefore, DWDM-based networks can carry different types of traffic at different speeds over an optical channel.

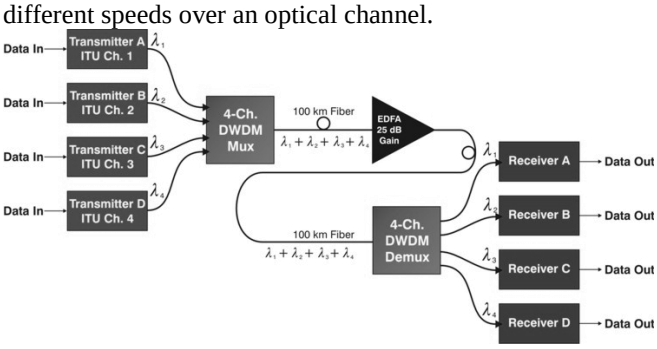

IX. CONCLUSION

A. *Benefits of SDH*

A transport network using SDH provides much more powerful networking Capabilities than existing asynchronous systems. The key benefits provided by SDH are the following.

1. Pointers, MUX/DEMUX

Pointers are the key to synchronous timing; they allow very flexible allocation and alignment of the payload within the transmission frame.

2. Reduced Back-to-Back Multiplexing

In the asynchronous PDH systems, care must be taken when routing circuits in order to avoid multiplexing and demultiplexing too many times.

3. Optical Interconnect

Today's SDH standards contain definitions for fiber-to-fiber interphase at physical level. They determine the optical line rate, wavelength, power levels, pulse shapes, and coding.

Enhancements are being developed to define the messages in the overhead channels to provide increased OAM functionality.

SDH allows optical interconnection between network providers regardless who makes the equipment.

4. Multi-point Configurations

Most existing asynchronous transmission systems are only economic for point-to-point applications, whereas SDH can efficiently support a multi-point or cross-connected configuration. The cross-connect allows many nodes or sites to communicate as a single network instead of as separate systems.

5. Grooming

Grooming refers to either consolidating or segregating traffic to make more efficient use of the network facilities. Consolidation means combining traffic from different locations onto one facility, while segregation is the separation of traffic.

6. Enhanced OAM

SDH allows integrated network OAM, in accordance with the philosophy of single-ended maintenance. In other words, one connection can reach all network elements within a given architecture; separate links are not required for each network element. Remote provisioning provides centralized maintenance and reduced travel for maintenance personnel – which translates to expense savings.

Note: OAM is sometimes referred to as OAM&P

REFERENCES

[1] ITU-T:
1. G.701 – Vocabulary of digital transmission and multiplexing and PCM terms
2. G.702 – Digital Hierarchy bit rates
3. G.784 – SDH management
4. F.750 (ITU-R) – Architectures and functional aspects of radio-relay systems for SDH based networks

[2] Ferguson, S.P. ; GPT Ltd., Coventry, UK, IEEE Xplore Electronics & Communication Engineering Journal (Volume:6 , Issue: 3)

[3] "Synchronous Optical Network (SONET)". Web ProForums. International Engineering Consortium. 2007. Archived from the original on 2008-04-07. Retrieved 2007-04-21.

[4] Hassan, Rosilah, James Irvine, and Ian Glover. "Design and Analysis of Virtual Bus Transport Using Synchronous Digital Hierarchy/Synchronous Optical Networking." Journal of Computer Science 4.12 (2008): 1003-011. Print.

[5] Jump up to:[a] [b] "SONET/SDH Technical Summary". TechFest. TechFest.com. 2002. Retrieved 2010-11-13.

